天康集团
TIANKANG GROUP

温度传感器选型样本

TEMPERATURE SENSOR PRODUCT SELECTION CATALOGUE

安徽天康(集团)股份有限公司
ANHUI TIANKANG(GROUP) SHARES CO.,LTD

INNOVATION MAKES EXCELLENT

有 | 跨 | 越 | 才 | 有 | 卓 | 越

安徽天康(集团)股份有限公司

ANHUI TIANKANG(GROUP) SHARES CO.,LTD

Brief Introduction
企业简介

安徽天康（集团）股份有限公司创建于1974年，总部位于“长三角”经济圈核心区域——天长市,是中国民营企业制造业500强企业、中国电子信息百强企业、国家级守合同重信用企业、国家高新技术企业、安徽省依法纳税先进企业、银行资信AAA级企业、中国仪表行业十强企业、中国电线电缆行业十强企业、安徽省重点骨干企业。

天康集团历经四十多年的发展，已形成集仪器仪表、光电缆、医疗卫生、锂电池等跨行业、多元化的集团公司，下属子公司达20余家。旗下产品被广泛应用于石油、电力、化工、通讯、卫生、新能源汽车及储能等行业和领域。

作为皖东经济最具活力与贡献的骨干企业之一，天康集团以“追求卓越，缔造满意”为目标，依托一流的产品、一流的管理、一流的服务，不仅在国内市场中赢得了广泛赞誉；在国际市场中，天康产品远销欧洲、非洲、亚洲等46个国家和地区，出口额连年攀升。

天康集团在发展中逐步形成了独特的品牌文化及着眼全球的经营布局，全力塑造“高科技、高品质、国际化”的品牌形象。始终秉持“有跨越才有卓越”的天康精神，在创建和谐企业的基础上，引进国际先进的构架与模式，组织企业的生产经营管理体系。在积极参与国际化竞争的基础上，不断把握市场发展脉搏，寻求经济战略联盟，与全球伙伴共同发展与进步。

Anhui Tiankang (Group) Shares Co.,LTD was founded in 1974,the headquarters is located in the "Yangtze River Delta" economic circle core region - Tianchang, it is China's top 500 enterprise in the manufacturing industry, China's top 100 electronic information enterprise, National contract and trustworthy enterprise, National high-tech enterprise, Anhui advanced enterprise paying tax according to law, AAA-level bank credit enterprise, China 's top 10 enterprise in the instrument industry, China's top 10 enterprise in the wire and cable industry , the key enterprises in Anhui Province.

After more than 40 years development, Tiankang group has formed a cross-industry and diversified group company which products include instruments, optical cable, medical and health, lithium battery etc, it has more than 20 subsidiaries. Its products are widely used in industries and fields of petroleum, electricity, chemical, communication, health, new energy vehicles and energy storage etc.

In recent years, the group has actively built Anhui largest new energy industry base, it invested 2 billion 600 million yuan to build 2 billion ampere hours LTO battery production line. In December 2012, Tiankang passed the identification of scientific and technological achievements, its nano LTO power / energy storage battery product has reached the level of leading in domestic and advanced in international. It has been listed as the national key new product by the ministry of science and technology and other three ministries and commissions, and the provincial & government of Anhui have taken this project as one of the five major economic growth projects in Anhui province. The product has advantages of safety, environmental protection, long life, high & low temperature characteristics, high rate charge & discharge characteristics, can be widely used in the power fields of new energy vehicles etc and energy storage fields, and also has important use in the fields of military system, shipping transportation, aerospace etc.

As one of the backbone enterprises in east Anhui economy of the most dynamic and contribution, Tiankang group take "pursuit excellence, to create satisfaction" as the goal, relying on first-class product, first-class management, first-class service, the products not only won widespread praise in the domestic markets; but also in the international markets, the products were export to Europe, Africa, Asia etc 46 ountries and regions, exports increased year by year.

Tiankang group formed a unique brand culture and focus on the global business layout in the development, and try to create a "high-tech, high-quality, international" brand image. It always uphold the spirit of "to stride to be outstanding", on the basis of creating a harmonious enterprise, introduce the international advanced architecture and model, and organize the production and management system of enterprise. On the basis of actively participating in international competition, we should constantly grasp the pulse of market development, actively seek for economic strategic alliances, and develop and progress with global partners.

目 录

铠装热电偶 …… **1**

防水式铠装热电偶 …… 5
圆接插式铠装热电偶 …… 7
扁接插式铠装热电偶 …… 9
补偿导线式铠装热电偶 …… 10
手柄式铠装热电偶 …… 12

装配热电偶 …… **14**

无固定装置热电偶 …… 16
固定螺纹式热电偶 …… 18
活动法兰式热电阻 …… 20
固定法兰式热电阻 …… 21
固定螺纹锥式热电偶 …… 23
活络管接式热电偶 …… 24
直形管接头式热电偶 …… 25
固定螺纹管接头式热电偶 …… 26

防爆热电偶 …… **28**

固定螺纹式热电偶 …… 31
固定法兰式热电偶 …… 32
活络管接头式热电偶 …… 33
直形管接头式热电偶 …… 34
固定螺纹管接头式热电偶 …… 35

铠装热电阻 …… **36**

防水式铠装热电阻 …… 36
圆接插式铠装热电阻 …… 39
扁接插式铠装热电阻 …… 40
补偿导线式铠装热电 …… 41

装配热电阻 …… **43**

无固定装置热电阻 …… 45
固定螺纹式热电阻 …… 46
活动法兰式热电阻 …… 48
固定法兰式热电阻 …… 49
固定螺纹维形热电阻 …… 51
活络管接头式热电阻 …… 52
直形管接头式热电阻 …… 52
固定螺纹管接头式热电阻 …… 53

防爆热电阻 …… **54**

固定螺纹热电阻 …… 57
固定法兰式热电阻 …… 58
活络管接头式热电阻 …… 58
直形管接头式热电阻 …… 59
固定螺纹管接头式热电阻 …… 59

带温度变送器防爆热电偶(阻) …… **60**

固定螺纹式 …… 63
固定法兰式 …… 65
直形管接头式 …… 67

SBW系列温度变送器

电站热电偶（阻） …… **72**

热套热电偶（阻） …… 74
炉顶热电偶（阻） …… 77
炉壁热电偶（阻） …… 78
轴承热电偶（阻） …… 79
端面热电阻 …… 80
耐磨热电偶（阻） …… 81

石油化工热电偶 …… 82

裂解炉专用热电偶 …… 83
高温高压热电偶 …… 84
耐磨切断热电偶 …… 87
耐磨阻漏热电偶 …… 88
吹气热电偶 …… 89
多点热电偶 …… 90
多点隔爆热电偶 …… 92
防腐热电阻 …… 93
高温防腐热电偶 …… 94
炉管刀刃热电偶 …… 95
气化炉高温热电偶 …… 96

特殊热电偶(阻) …… **97**

微型热电偶(阻) …… 98
微细铠装热电偶 …… 99
压簧固定热电偶 …… 100
插座式热电阻 …… 101
直角弯头热电偶 …… 102
高温贵金属热电偶 …… 103
热风炉热电偶 …… 104
气化炉高温热电偶 …… 105
耐磨热电偶、耐磨热电阻 …… 106
多点热电偶（阻） …… 107
硫磺回收吹气热电偶 …… 108

双金属温度计 …… **109**

轴向型 …… 113
径向型 …… 114
135°向型 …… 115
万向型 …… 116
电接点双金属温度计 …… 118
防爆电接点双金属温度计 …… 121
带远传双金属温度计 …… 123

热安装套管 …… **125**

CONTENTS

Sheath thermocouple **1**

Sheath thermocouple of waterproof type 5
Sheath thermocouple of circular interpolation 7
Sheath thermocouple of flat socket type 9
Armored thermocouple with compensation wire 10
Handle type armoured thermocouple 12

Assembled sheathed thermocouple **14**

Thermocouple with non-fixing device 16
Fixed-screw type thermocouple 18
Active flange type thermal resistance 20
Fixed-flange type thermal resistance 21
Fixed thread cone thermocouple 23
Thermocouple of joint type of adjustable pipe 24
Straight pipe joint type thermocouple 25
Fixed thread pipe joint type thermocouple 26

Explosion proof thermocouple **28**

Fixed screw type thermocouple 31
Fixed flange type thermocouple 32
Adjustable pipe joint type thermocouple 33
Straight pipe joint type thermocouple 34
Fixed threaded pipe joint type thermocouple 35

Sheathed thermal resistance **36**

Sheath thermal resistance of water-proof type 36
Sheath thermal resistance of circular interpolation type 39
Sheath thermal resistance of flat socket type 40
Sheath thermal resistance of compensating wire type 41

Assembling thermal resistance **43**

Non-fixed assembly thermal resistance 45
Fixed screw type thermal resistance 46
Active flange type thermal resistance 48
Fixed-flange type thermal resistance 49
Fixed thread cone thermal resistance 51
Adjustable pipe joint type thermal resistance 52
Straight pipe joint type thermal resistance 53
Fixed thread pipe joint type thermal resistance 54

Explosion–proof thermal resistance **55**

Fixed screw type thermal resistance 58
Fixed flange type thermal resistance 59
Adjustable pipe joint type thermal resistance 59
Straight pipe joint type thermal resistance 60
Fixed threaded pipe joint type thermal resistance 60

Explosion–proof thermal resistance with temperature transmitter (resistance) **61**

Fixed screw type 63
Fixed flange type 65
Straight pipe joint type 67

Temperature transmitter of SBW series **68**

Thermocouple used in power station (resistance) **72**

Thermal sheathed thermocouple (resistance) 74
Thermocouple on the top of the boiler (resistance) 77
Thermocouple (resistance) for wall furnace 78
Bearing thermocouple (resistance) 79
End face thermal resistance 84 80
Wear-resistant thermocouple 81

Petroleum chemical thermocouple (resistance) **82**

Specialized thermocouple for splitting decomposition furnace 83
High temperature and high pressure thermocouple 84
Wear resistant cutting thermocouple 87
Wear-resistance and and anti-leakage thermocouple 88
Blowing thermocouple 89
Multipoint thermocouple 90
Multiple points explosion-proof thermocouple 92
Anti-corrosion thermal resistance 93
High-temperature anti-erosion thermocouple 94
Cutting-edge thermocouple for furnace tube 95
Cutting-edge thermocouple for furnace tube 96

Special thermocouple (resistance) **97**

Miniature thermocouple (resistance) 98
Micro sheath thermocouple 99
ixed thermocouple by pressure spring 100
Thermal resistance of socket type 101
The bend thermocouple with right angle 102
High temperature thermocouple of precious metal 103
Thermocouple for hot blast stove 104
High temperature thermocouple for gasification furnace 105
Wear-resistant thermocouple and thermal resistance 106
Multipoint thermocouple (resistance) 107
ulfur recovery blowing thermocouple 108

Bimetallic thermometer **109**

Axial type 113
Radial type 114
135°type 115
Universal type 116
Bimetallic thermometer of electric contact point 118
Explosion proof electric contact bimetallic thermometer 121
With remote double metal thermometer 123

Thermal mounting sleeve **125**

铠装热电偶 Sheath thermocouple

应用

通常和显示仪表、记录仪表、电子计算机等配套使用。直接测量各种生产过程中的0℃~1300℃范围内液体、蒸汽和气体介质以及固体表面温度。

Application

It is usually used along with display instruments, recording instruments, electronic computers and so on. It is able to directly measure the temperature of liquid, steam and gas and solid surface in a variety of production processes within the range of 0 ~1300℃.

工作原理

铠装热电偶的电极由两根不同导体材质组成。当测量端与参比端存在温差时，就会产生热电势，工作仪表便显示出热电势所对应的温度值。

Working principle

The electrode of sheath thermocouple are consisted by two different materials of conductor. When there is a temperature difference between the measuring end and the reference end, it will generate the thermal electric potential. The working instrument will show the corresponding temperature value of the thermal electric potential.

特点

热响应时间少，减小动态误差;
可弯曲安装使用;
测量范围大;
机械强度高，耐压性能好。

Characteristics

Less thermal response time,which can reduce the dynamic error.
Flexible mounting for use.
Wide measuring scope.
High mechanical strength and good pressure resistance.

主要技术参数

产品执行标准:IEC584，GB/T18404-2001。

Main technical parameters

Product implementation standard:IEC584,GB/T18404-2001.

测温范围及允差

Range for temperature measurement and error-tolerance

型号 Model	分度号 Graduation	允差等级 Tolerance level			
		I		II	
		测温范围 ℃ Range of temperature measurement ℃	允差值 Tolerance value	测温范围 ℃ Range of temperature measurement ℃	允差值 Tolerance value
WRNK	K	-40~+375	±1.5℃	-40~+333	±2.5℃
		375~1000	±0.004|t|	333~1200	±0.0075|t|
WRMK	N	-40~+375	±1.5℃	-40~+333	±2.5℃
		375~1000	±0.004|t|	333~1200	±0.0075|t|
WREK	E	-40~+375	±1.5℃	-40~+333	±2.5℃
		375~800	±0.004|t|	333~900	±0.0075|t|
WRFK	J	-40~+375	±1.5℃	-40~+333	±2.5℃
		375~750	±0.004|t|	333~750	±0.0075|t|
WRCK	T	-40~+125	±0.5℃	-40~+133	±1.0℃
		125~350	±0.004|t|	133~350	±0.0075|t|
WRPK	S	0~+1100	±1.0℃	0~600	±1.5℃
		1100~1600	±[1+0.003(t-1100)]	600~1600	±0.0025|t|
WRQK	R	0~1100	±1℃	0~600	±1.5
		1100~1600	±[1+0.003(t-1100)]	600~1600	±0.0025|t|
WRRK	B	—	—	600~1700	±0.0025|t|
		—	—	—	—

注：t为检验温度点绝对值，单位为℃

Note: t is the absolute value of the temperature point, the unit is ℃

常温绝缘电阻

铠装偶在环境温度为20±15℃，相对湿度不大于80%，试验电压为500±50V（直流）电极与外套管之间的绝缘电阻≥1000MΩ。
即1m长的试样的绝缘电阻为1000MΩ;
10m长的试样的绝缘电阻为100MΩ。

Insulation resistance for normal temperature

In terms of the sheath thermocouple, the environment temperature is 20 + 15℃, the relative humidity is not more than 80%, the test voltage is 500 + 50V(DC), the insulation resistance between electrode and outer sleeve≥1000MΩ.m.
That is to say, the insulation resistance for sample of 1m is 1000MΩ; the insulation resistance for sample of 10m is 100MΩ.

偶丝直径及材料

Diameter and material for the thermocouple wire

偶丝形式 Graduation		单支式 Graduation	双支式 Graduation
套管直径 Graduation		Φ2,Φ3,Φ4,Φ5,Φ6,Φ8	Φ3,Φ4,Φ5,Φ6,Φ8
分度号 Graduation	E、J、T	1Cr18Ni9Ti	1Cr18Ni9Ti
	K、N	1Cr18Ni9Ti GH3030	1Cr18Ni9Ti GH3030
	S、R、B	GH3030	GH3039

安装固定形式 Installation and fixation form

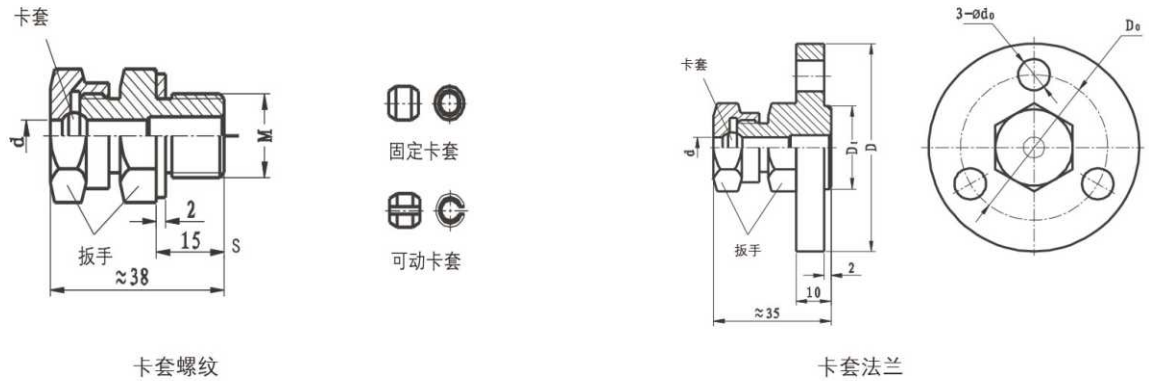

代号和尺寸 Code and size	铠装偶外径 The outer diameter of sheathed thermocouple	
	Φ8,Φ6,Φ5	Φ4,Φ3,Φ2
M	M16×1.5	M12×1.5
S	22	19
D	Φ60	Φ50
D_0	Φ42	Φ36
D_1	Φ24	Φ20
S	Φ22	Φ19
d_0	Φ9	Φ7

测量端结构形式 Structure form in the measuring terminal

接线盒形式 Junction box form

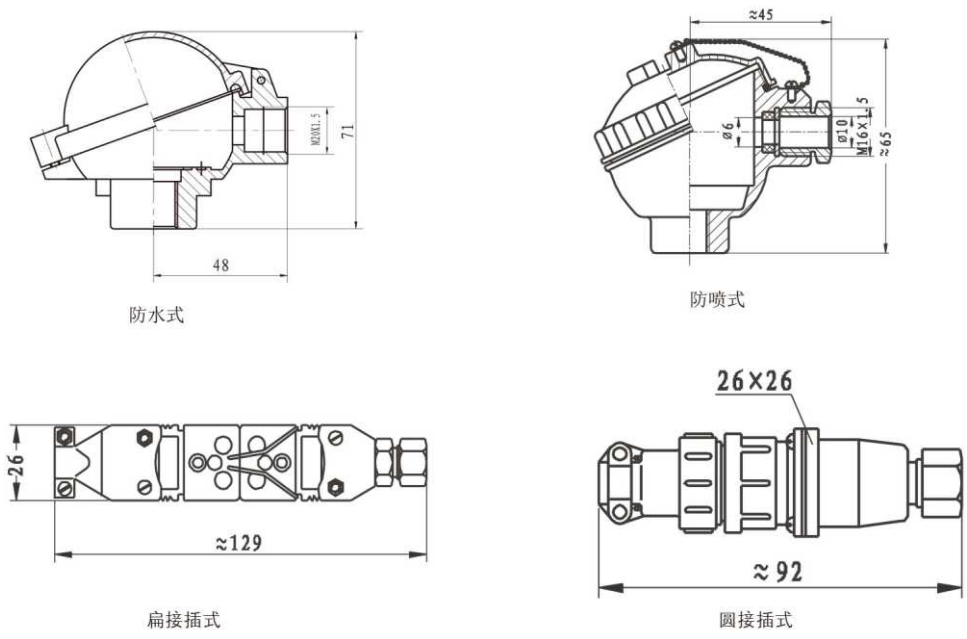

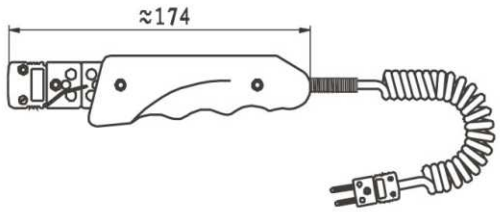

手柄式

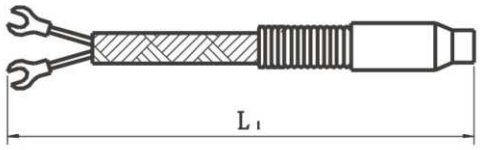

带补偿导线式

铠装热电偶推荐使用温度

Recommend temperature for use of sheathed thermocouple

品种 Category	套管材料 Casing material	外径(mm) Outer diameter(mm)	使用温度(℃) Temperature for usage (℃)	
			长期使用 Long-term use	短期使用 Short-term use
镍铬-镍硅 Nickel chromium -nickel silicon	1Cr18Ni9Ti	2.0	600	700
		3.0,4.0,5.0,6.0,8.0	800	900
	GH3030	2.0,3.0	800	900
		4.0,5.0	900	1000
		6.0,8.0	1000	1100
镍铬硅-镍 Nichrome -nickel silicon	1Cr18Ni9Ti	2.0	600	700
		3.0,4.0,5.0,6.0,8.0	800	900
	GH3030	2.0,3.0	900	1000
		4.0,5.0	1000	1100
		6.0,8.0	1100	1200
	GH3030	2.0,3.0,4.0,	1000	1100
		5.0,6.0,8.0	1100	1200
镍铬一铜镍 Nickel chromium -nickel copper	1Cr18Ni9Ti	2.0,	500	600
		3.0,4.0,5.0	600	700
		6.0,8.0	700	800
铁-铜镍 Iron-copper nickel	1Cr18Ni9Ti	2.0	400	500
		3.0,4.0,5.0,	500	600
		6.0,8.0	600	750
铜-铜镍 Copper-copper Nickel	1Cr18Ni9Ti	2.0,3.0,4.0,5.0	250	300
		6.0,8.0	300	350
铂铑10-铂 Platinum10-rhodium	GH3030	2.0,3.0,4.0	1000	1100
		5.0,6.0,8.0	1100	1200
铂铑13-铂 Platinum10-rhodium	1Cr18Ni9Ti	2.0,3.0,4.0,5.0	250	300
		6.0,8.0	300	350
铂铑30-铂 Platinum10-rhodium	Gh3039	2.0,3.0,4.0	1000	1100
		5.0,6.0,8.0	1100	1200

附加装置形式

Form of additional device

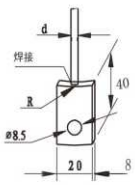

注：选型时应 注明R大小
（即管壁或炉壁直径）

接触块式（代号M）

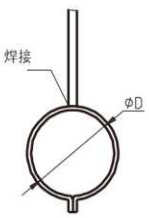

包箍式(代号G)

型号命名方法 Naming method for model

W 温度仪表 Temperature instrument

R 热电偶 Thermocouple

感温元件材料 Material for temperature-sensing element

P 铂铑10-铂 Platinum10- rhodium
Q 铂铑13-铂 Platinum10- rhodium
M 镍铬硅-镍硅 Nichrome-nickel silicon
N 镍铬-镍硅 Nickel chromium-nickel silicon
E 镍铬-铜镍 Nickel chromium-copper nickel
C 铜-铜镍 Copper-copper nickel
F 铁-铜镍 Iron-copper nickel

K 铠装式 Sheathed type

偶丝对数 Number of thermal wire couple

无 单支 Non, single support
2 双支 2 double support

安装固定装置 Installation and fixation mode

1 无固定装置 Non-fixing device
2 固定卡套螺纹 Fixed-sleeve screw thread
3 活动卡套螺纹 Active-sleeve screw thread
4 固定卡套法兰 Fixed-sleeve flange
5 活动卡套法兰 Active-sleeve flange

接线盒形式 Junction box form

2 防喷式 Anti-spray type
3 防水式 Water-proof type
6 圆接插式 Circular interpolation type
7 扁接插式 Flat socket type
8 手柄式 Handle type
9 补偿导线式 Compensating wire type
0 感温元件 Temperature-sensing element

工作端形式 Form in the working terminal

1 绝缘式 Upper and lower limitation
2 接壳式 Double upper limitations
附加装置形式 Double lower limitations

附加装置形式 Additional device form

M 接触块式 Upper and lower limitation
G 包箍式 Double upper limitations

W	R	N	K	$_2$	-	2	3	1	M	典型型号示例 Examples of typical model

感温元件 Temperature-sensing element

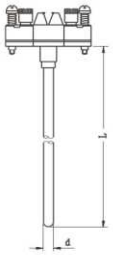

名称 Name	型号 Model	分度号 Graduation	测温范围 ℃ Range of temperature measurement ℃	规格 Specification	
				d	L
镍铬硅-镍硅 Nichrome-nickel silicon	WRM-101 WRM2-101	N	0~1000	Φ3 Φ4 Φ5 Φ6 Φ8	310 360 410 460 510 560 660 910 1160
镍铬-镍硅 Nickel chromium nickel silicon	WRN-101 WRN2-101	K			
镍铬-铜镍 Nickel chromium-nickel copper	WRE-101 WRE2-101	E	0~800		
铜-铜镍 Copper-copper Nickel	WRC-101 WRC2-101	T	0~350		
铁-铜镍 Iron-copper nickel	WRF-101 WRF2-101	J	0~600		

防水式铠装热电偶 Sheath thermocouple of waterproof type

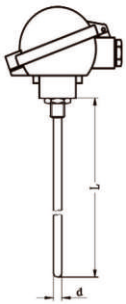

防水式 131

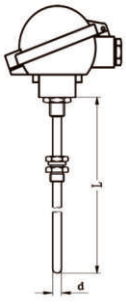

防水式 231 331

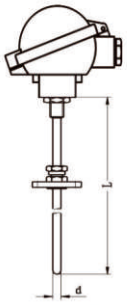

防水式 431 531

型号 Model	分度号 Graduation	测温范围℃ Range of temperature measurement℃	保护管材质 Material for protective tube	安装固定装置 Installation and fixation device
WRPK-131	S	0~1300	GH3039	无固定装置 No fixation device
WRMK-131	N	0~1100	GH3030	
		0~800	Cr18Ni9Ti	
WRNK-131	K	0~1100	GH3030	
		0~800	Cr18Ni9Ti	
WREK-131	E	0~800	1Cr18Ni9Ti	
WRCK-131	T	0~350		
WRFK-131	J	0~600		

型号 Model	分度号 Graduation	测温范围℃ Range of temperature measurement℃	保护管材质 Material for protective tube	安装固定装置 Installation and fixation device
WRPK-231	S	0~1300	GH3039	固定卡套螺纹 Fixed-sleeve screw thread
WRMK-231	N	0~1100	GH3030	
		0~800	1Cr18Ni9Ti	
WRNK-231	K	0~1100	GH3030	
		0~800	1Cr18Ni9Ti	
WREK-231	E	0~800	1Cr18Ni9Ti	
WRCK-231	T	0~350		
WRFK-231	J	0~600		
WRPK-331	S	0~1300	GH3039	可动卡套螺纹 Movable-sleeve screw thread
WRMK-331	N	0~1100	GH3030	
		0~800	1Cr18Ni9Ti	
WRNK-331	K	0~1100	GH3030	
		0~800	1Cr18Ni9Ti	
WREK-331	E	0~800	1Cr18Ni9Ti	
WRCK-331	T	0~350		
WRFK-331	J	0~600		
WRPK-431	S	0~1300	GH3039	固定卡套法兰 Fixed-sleeve screw flange
WRMK-431	N	0~1100	GH3030	
		0~800	1Cr18Ni9Ti	
WRNK-431	K	0~1100	GH3030	
		0~800	1Cr18Ni9Ti	
WREK-431	E	0~800	1Cr18Ni9Ti	
WRCK-431	T	0~350		
WRFK-431	J	0~600		
WRPK-531	S	0~1300	GH3039	可动卡套法兰 Movable-sleeve screw flange
WRMK-531	N	0~1100	GH3030	
		0~800	1Cr18Ni9Ti	
WRNK-531	K	0~1100	GH3030	
		0~800	1Cr18Ni9Ti	
WREK-531	E	0~600	1Cr18Ni9Ti	
WRCK-531	T	0~350		
WRFK-531	J	0~600		

1)型号121、221、321防护等级IP65，其他参数同131、231、331;
2)热电偶I级按协议订货;
3)未注明测温范围及保护管材质，保护管材质一律视为1Cr18Ni9Ti。

1) The protective grade of model 121、221、321 is IP65 and other parameter is the same as 131、231、331.
2) Thermocouple I is ordered according to the agreement.
3) The material of protective tube is 1Cr18Ni9Ti is the temperature scope and material are noted.

接线方式

Wire-connecting mode

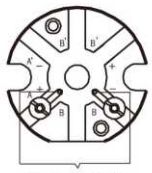

单支接线方法

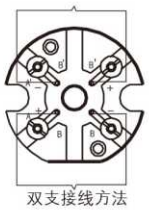

双支接线方法

圆接插式铠装热电偶 Sheath thermocouple of circular interpolation

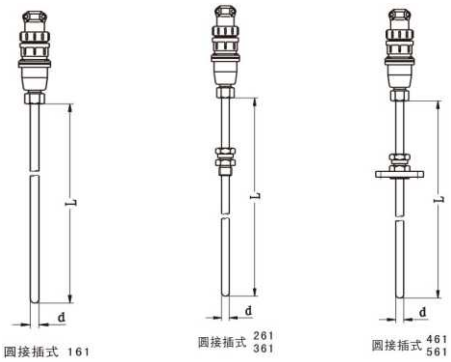

名 称 Name	型号 Model	分度号 Graduation	测温范围℃ Range of temperature measurement℃	安装固定装置 Installation and fixation device
铂铑10-铂 platinum10-rhodium	WRPK-161 WRPK2-161	S	0~1300	无固定装置 No fixation device
镍铬硅-镍硅 Nichrome-nickel silicon	WRMK-161 WRMK2-161	N	0~1100	
镍铬-镍硅 Nickel chromium nickel silicon	WRNK-161 WRNK2-161	K		
镍铬-铜镍 Nickel chromium -nickel copper	WREK-161 WREK2-161	E	0~800	
铜-铜镍 Copper-copper Nickel	WRCK-161 WRCK2-161	T	0~350	
铁-铜镍 Iron-copper nickel	WRFK-161 WRFK2-161	J	0~600	
铂铑10-铂 platinum10-rhodium	WRPK-261 WRPK2-261	S	0~1300	固定卡套螺纹 Fixed-sleeve screw thread
镍铬硅-镍硅 Nichrome -nickel silicon	WRMK-261 WRMK2-261	N	0~1100	
镍铬-镍硅 Nickel chromium -nickel silicon	WRNK-261 WRNK2-261	K		
镍铬-铜镍 Nickel chromium -nickel copper	WREK-261 WREK2-261	E	0~800	
铜-铜镍 Copper-copper Nickel	WRCK-261 WRCK2-261	T	0~350	
铁-铜镍 Iron-copper nickel	WRFK-261 WRFK2-261	J	0~500	
铂铑10-铂 platinum10-rhodium	WRPK-361 WRPK2-361	S	0~1300	可动卡套螺纹 Movable-sleeve screw thread
镍铬硅-镍硅 Nichrome -nickel silicon	WRMK-361 WRMK2-361	N	0~1100	
镍铬-镍硅 Nickel chromium -nickel silicon	WRNK-361 WRNK2-361	K		
镍铬一铜镍 Nickel chromium -nickel copper	WREK-361 WREK2-361	E	0~800	
铜-铜镍 Copper-copper Nickel	WRCK-361 WRCK2-361	T	0~350	
铁-铜镍 Iron-copper nickel	WRFK-361 WRFK2-361	J	0~600	

名 称 Name	型 号 Model	分度号 Graduation	测温范围℃ Range of temperature measurement℃	安装固定装置 Installation and fixation device
铂铑10-铂 platinum10- rhodium	WRPK-461 WRPK2-461	S	0~1300	固定卡套法兰 Fixed-sleeve screw flange
镍铬硅一镍硅 Nichrome —nickel silicon	WRMK-461 WRMK2-461	N	0~1100	
镍铬一镍硅 Nickel chromium nickel silicon	WRNK-461 WRNK2-461	K		
镍铬一铜镍 Nickel chromium - nickel copper	WREK-461 WREK2-461	E	0~800	
铜-铜镍 Copper - copper Nickel	WRCK-461 WRCK2-461	T	0~350	
铁-铜镍 Iron-copper nickel	WRFK-461 WRFK2-461	J	0~600	
铂铑10-铂 platinum10- rhodium	WRPK-561 WRPK2-561	S	0~1300	可动卡套法兰 Movable-sleeve screw flange
镍铬硅一镍硅 Nichrome —nickel silicon	WRMK-561 WRMK2-561	N	0~1100	
镍铬一镍硅 Nickel chromium nickel silicon	WRNK-561 WRNK2-561	K		
镍铬一铜镍 Nickel chromium - nickel copper	WREK-561 WREK2-561	E	0~800	
铜-铜镍 Copper - copper Nickel	WRCK-561 WRCK2-561	T	0~350	
铁-铜镍 Iron-copper nickel	WRFK-561 WRFK2-561	J	0~600	

1)热电偶I级按协议订货；

2)未注明测温范围及保护管材质，保护管材质一律视为1Cr18Ni9Ti。

1) Thermocouple I is ordered according to the agreement.

2) The material of protective tube is 1Cr18Ni9Ti is the temperature scope and material are noted.

扁接插式铠装热电偶 Sheath thermocouple of flat socket type

扁接插式 171

扁接插式 271 371

扁接插式 471 571

名 称 Name	型 号 Model	分度号 Graduation	测温范围℃ Range of temperature measurement℃	安装固定装置 Installation and fixation device
铂铑10-铂 Platinum10-rhodium	WRPK-171	S	0~1300	无固定装置 No fixation device
镍铬硅-镍硅 Nichrome-nickel silicon	WRMK-171	N	0~1100	
镍铬-镍硅 Nickel chromium nickel silicon	WRNK-171	K		
镍铬-铜镍 Nickel chromium-nickel copper	WREK-171	E	0~800	
铜-铜镍 Copper-copper Nickel	WRCK-171	T	0~350	
铁-铜镍 Iron-copper nickel	WRFK-171	J	0~600	
铂铑10-铂 Platinum10-rhodium	WRPK-271	S	0~1300	固定卡套螺纹 Fixed-sleeve screw thread
镍铬硅-镍硅 Nichrome-nickel silicon	WRMK-271	N	0~1100	
镍铬-镍硅 Nickel chromium nickel silicon	WRNK-271	K		
镍铬-铜镍 Nickel chromium-nickel copper	WREK-271	E	0~800	
铜-铜镍 Copper-copper Nickel	WRCK-271	T	0~350	
铁-铜镍 Iron-copper nickel	WRFK-271	J	0~600	
铂铑10-铂 Platinum10-rhodium	WRPK-371	S	0~1300	可动卡套螺纹 Movable-sleeve screw thread
镍铬硅-镍硅 Nichrome-nickel silicon	WRMK-371	N	0~1100	
镍铬-镍硅 Nickel chromium nickel silicon	WRNK-371	K		
镍铬-铜镍 Nickel chromium-nickel copper	WREK-371	E	0~800	
铜-铜镍 Copper-copper Nickel	WRCK-371	T	0~350	
铁-铜镍 Iron-copper nickel	WRFK-371	J	0~600	
铂铑10-铂 Platinum10- rhodium	WRPK-471	S	0~1300	固定卡套法兰 Fixed-sleeve screw flange
镍铬硅-镍硅 Nichrome-nickel silicon	WRMK-471	N	0~1100	
镍铬-镍硅 Nickel chromium nickel silicon	WRNK-471	K		
镍铬-铜镍 Nickel chromium-nickel copper	WREK-471	E	0~800	
铜-铜镍 Copper-copper Nickel	WRCK-471	T	0~350	
铁-铜镍 Iron-copper nickel	WRFK-471	J	0~600	
铂铑10-铂 Platinum10-rhodium	WRPK-571	S	0~1300	可动卡套法兰 Movable-sleeve screw flange
镍铬硅-镍硅 Nichrome-nickel silicon	WRMK-571	N	0~1100	
镍铬-镍硅 Nickel chromium nickel silicon	WRNK-571	K		
镍铬-铜镍 Nickel chromium-nickel copper	WREK-571	E	0~800	
铜-铜镍 Copper-copper Nickel	WRCK-571	T	0~350	
铁-铜镍 Iron-copper nickel	WRFK-571	J	0~600	

1)热电偶I级按协议订货；
2)未注明测温范围及保护管材质，保护管材质一律视为1Cr18Ni9Ti；

1) Thermocouple I is ordered according to the agreement
2) The material of protective tube is 1Cr18Ni9Ti is the temperature scope and material are noted;

补偿导线式铠装热电偶 Armored thermocouple with compensation wire

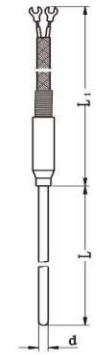

补偿导线式 191

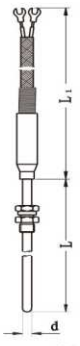

补偿导线式 291 391

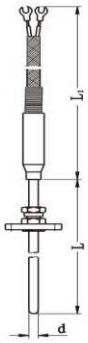

补偿导线式 491 591

型 号 Model	分度号 Graduation	测温范围℃ Range of temperature measurement℃	长度Length		安装固定装置 Installation and fixation device
			L	L1	
WRPK-191 $WRPK_2$-191	S	0~1300	100 200 300 400 500 750 1000 1500 2000 3000 4000 5000 7500 10000 15000 25000	500 750 1000 1500 2000 3000 4000 5000 7500 10000 15000 25000	无固定装置 No fixation device
WRMK-191 $WRMK_2$-191	N	0~1100			
WRNK-191 $WRNK_2$-191	K				
WREK-191 $WREK_2$-191	E	0~800			
WRCK-191 $WRCK_2$-191	T	0~350			
WRFK-191 $WRFK_2$-191	J	0~600			
WRPK-291 $WRPK_2$-291	S	0~1300			固定卡套螺纹 Fixed-sleeve screw thread
WRMK-291 $WRMK_2$-291	N	0~1100			
WRNK-291 $WRNK_2$-291	K				
WREK-291 $WREK_2$-291	E	0~800			
WRCK-291 $WRCK_2$-291	T	0~350			
WRFK-291 $WRFK_2$-291	J	0~500			
WRPK-391 $WRPK_2$-391	S	0~1300			可动卡套法兰 Movable-sleeve screw flange
WRMK-391 $WRMK_2$-391	N	0~1100			
WRNK-391 $WRNK_2$-391	K				
WREK-391 $WREK_2$-391	E	0~800			
WRCK-391 $WRCK_2$-391	T	0~350			
WRFK-391 $WRFK_2$-391	J	0~600			

<table>
<tr><th rowspan="2">型号
Model</th><th rowspan="2">分度号
Graduation</th><th rowspan="2">测温范围℃
Range of temperature measurement℃</th><th colspan="2">长度Length</th><th rowspan="2">安装固定装置
Installation and fixation device</th></tr>
<tr><th>L</th><th>L1</th></tr>
<tr><td>WRPK-491
WRPK$_2$-491</td><td>S</td><td>0~1300</td><td rowspan="11">100
200
300
400
500
750
1000
1500
2000
3000
4000
5000
7500
10000
15000
25000</td><td rowspan="11">500
750
1000
1500
2000
3000
4000
5000
7500
10000
15000
25000</td><td rowspan="6">固定卡套法兰
Fixed-sleeve screw flange</td></tr>
<tr><td>WRMK-491
WRMK$_2$-491</td><td>N</td><td rowspan="2">0~1100</td></tr>
<tr><td>WRNK-491
WRNK$_2$-491</td><td>K</td></tr>
<tr><td>WREK-491
WREK$_2$-491</td><td>E</td><td>0~800</td></tr>
<tr><td>WRCK-491
WRCK$_2$-491</td><td>T</td><td>0~350</td></tr>
<tr><td>WRFK-491
WRFK$_2$-491</td><td>J</td><td>0~600</td></tr>
<tr><td>WRPK-591
WRPK$_2$-591</td><td>S</td><td>0~1300</td><td rowspan="5">可动卡套法兰
Movable-sleeve screw flange</td></tr>
<tr><td>WRMK-591
WRMK$_2$-591</td><td>N</td><td rowspan="2">0~1100</td></tr>
<tr><td>WRNK-591
WRNK$_2$-591</td><td>K</td></tr>
<tr><td>WREK-591
WREK$_2$-591</td><td>E</td><td>0~800</td></tr>
<tr><td>WRCK-591
WRCK$_2$-591</td><td>T</td><td>0~350</td></tr>
<tr><td>WRFK-591
WRFK$_2$-591</td><td>J</td><td>0~600</td></tr>
</table>

手柄式铠装热电偶　Handle type armoured thermocouple

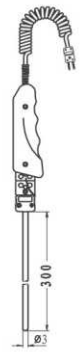

手柄式181

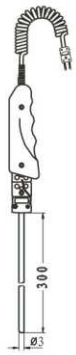

手柄式182

名 称 Name	型　号 Model	分度号 Graduation	外　径 Outer diameter	长　度 Length	工作端形式 Form in the working terminal
镍铬硅-镍硅 Nichrome-nickel silicon	WRMK-181	N	φ3~φ8	300~3000	绝缘式 Insulating type
镍铬-镍硅 Nickel chromium -nickel silicon	WRNK-181	K			
镍铬-铜镍 Nickel chromium -nickel copper	WREK-181	E			
铜-铜镍 Copper-copper Nickel	WRCK-181	T			
铁-铜镍 Iron-copper nickel	WRFK-181	J			
镍铬硅-镍硅 Nichrome -nickel silicon	WRMK-182	N			接壳式 Shell type
镍铬-镍硅 Nickel chromium -nickel silicon	WRNK-182	K			
镍铬-铜镍 Nickel chromium -nickel copper	WREK-182	E			
铜-铜镍 Copper-copper Nickel	WRCK-182	T			
铁-铜镍 Iron-copper nickel	WRFK-182	J			

安装形式 Installation form

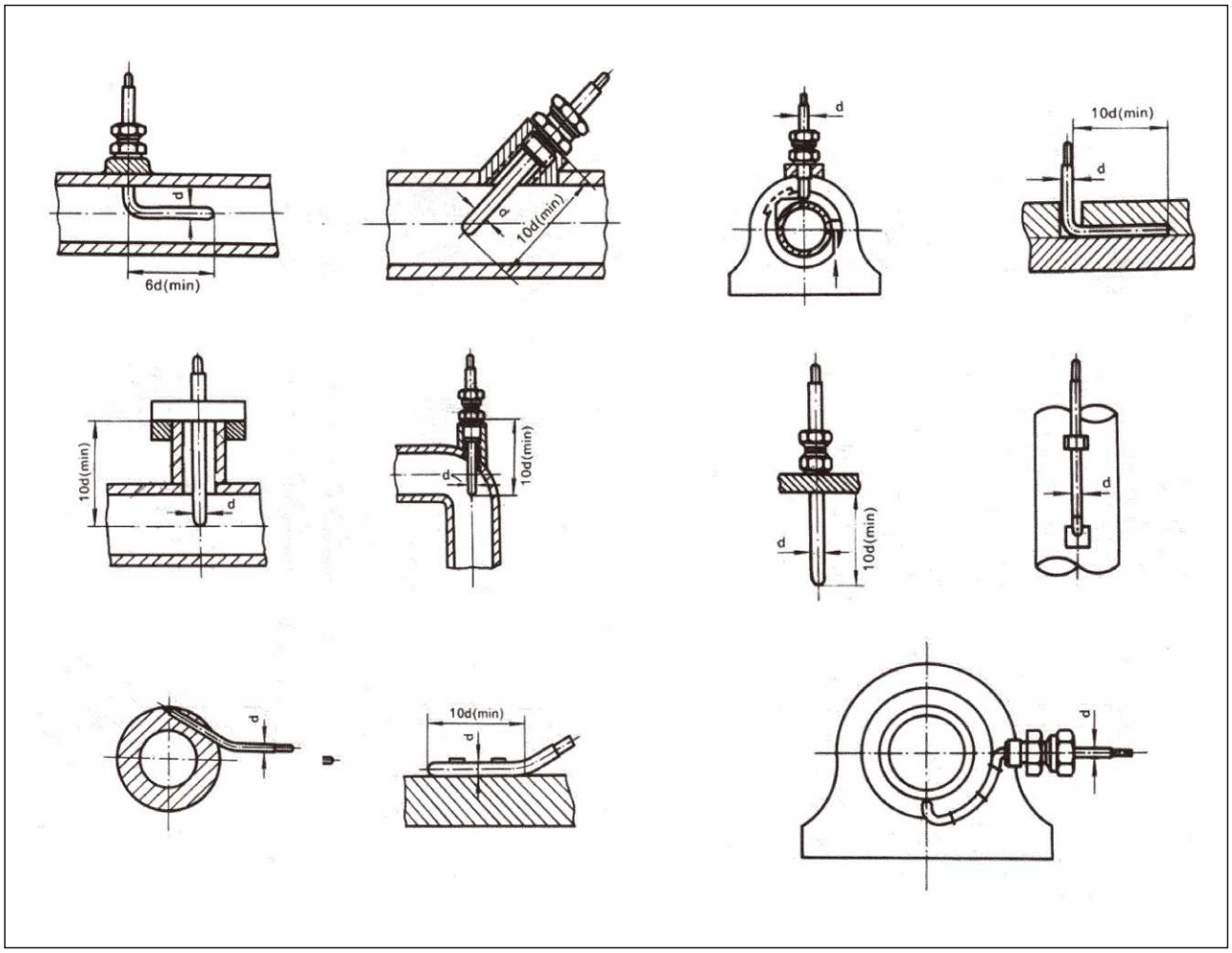

选型须知 Notice for model selection

型号
分度号
精度等级
安装固定形式
保护管材质
长度或插入长度

例：铠装热电偶，K型，I级，固定卡套螺纹，保护管GH3030，长度450mm，插入长度300mm，WRNK-231，Lx I=450x 300，I级保护管GH3030。

Model
Graduation
Precision grade
Installation and fixation form
Material for the protective tube
Length or insertion length

For example: in terms of the sheathed thermocouple, K model, I grade, fixed-sleeve screw, protective tube GH3030, length 450mm, insertion length: 300mm,WRNK-231,Lx I=450x 300, the protective tube of I grade GH3030.

装配热电偶　Assembled sheathed thermocouple

应用

通常和显示仪表、记录仪表、电子计算机等配套使用。直接测量各种生产过程中的0℃～1300℃范围内液体、蒸汽和气体介质以及固体表面温度。

Application

It is usually used along with display instruments, recording instruments, electronic computers and so on. It is able to directly measure the temperature of liquid, steam and gas and solid surface in a variety of production processes within the range of 0 ~1300℃.

工作原理

热电偶的电极由两根不同导体材质组成。当测量端与参比端存在温差时，就会产生热电势，工作仪表便显示出热电势所对应的温度值。

Working principle

The electrode of sheath thermocouple are consisted by two different materials of conductor. When there is a temperature difference between the measuring end and the reference end, it will generate the thermal electric potential. The working instrument will show the corresponding temperature value of the thermal electric potential.

特点

1.装配简单，更换方便;
2.压簧式感温元件,抗振性能好;
3.测量范围大;
4.机械强度高，耐压性能好。

Characteristics

1.Easy assembly and convenient change;
2.Pressure-spring type temperature sensing element with good anti-vibration performance;
3.Wide measuring scope;
4.High mechanical strength and good pressure resistance.

主要技术参数

1.产品执行标准：IEC584，GB/T30429-2013。
2.常温绝缘电阻
热电偶在环境温度为15~35℃ ,相对湿度45%~75%,试验电压为500±50V（直流）电极与外套管之间的绝缘电阻≥1000MΩ.m。即1m长的试样的绝缘电阻为1000MΩ;10m长的试样的绝缘电阻为100MΩ。

Main technical parameters

Product implementation standard :IEC584,GB/T30429-2013.
Insulation resistance in normal temperature
For thermocouple, the environment temperature is 15~35℃, the relative humidity is 45%~75%, the test voltage is 500 + 50V(DC), the insulation resistance between electrode and outer sleeve≥1000 MΩ.m.
That is to say, the insulation resistance for sample of 1m is 1000MΩ; the insulation resistance for sample of 10m is 100MΩ.

测温范围及允差

Temperature measurement range and tolerance error

型　号 Model	分度号 Graduation	允差等级 Tolerance level			
		I		II	
		允差值 Tolerance value	测温范围 ℃ Range of temperature measurement ℃	允差值 Tolerance value	测温范围 ℃ Range of temperature measurement ℃
WRN	K	±1.5℃	-40~+375	±2.5℃	-40~+333
		±0.004|t|	375~1000	±0.0075|t|	333~1200
WRM	N	±1.5℃	-40~+375	±2.5℃	-40~+333
		±0.004|t|	375~1000	±0.0075|t|	333~1200
WRE	E	±1.5℃	-40~+375	±2.5℃	-40~+333
		±0.004|t|	375~800	±0.0075|t|	333~900
WRF	J	±1.5℃	-40~+375	±2.5℃	-40~+333
		±0.004|t|	375~750	±0.0075|t|	333~750
WRC	T	±0.5℃	-40~+125	±1.0℃	-40~+133
		±0.004|t|	125~350	±0.0075|t|	133~350

接线盒形式 Junction box form

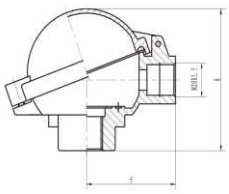

防水式

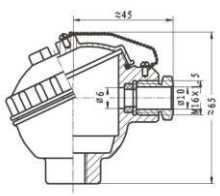

防喷式

典型型号示例 Wire-connection mode

W 温度仪表 Temperature instrument

R 热电偶 Thermocouple

感温元件材料 Material for temperature-sensing element

N 镍铬-镍硅 Nickel chromium-nickel silicon
M 镍铬硅-镍硅 Nichrome-nickel silicon
E 镍铬-铜镍 Nickel chromium-copper nickel
C 铜-铜镍 Copper-copper nickel
F 铁-铜镍 Iron-copper nickel

偶丝对数 Number of thermal wire couple

无 单支 Non, single support
2 双支 2 double support

安装固定装置 Installation and fixation mode

1 无固定装置 Non-fixing device
2 固定螺纹 Fixed screw thread
3 活动法兰 Active flange
4 固定法兰 Fixed flange
5 活络管接头式 Adjustable pipe joint type
6 固定螺纹锥形式 Fixed thread cone form
7 直形管接头式 Straight pipe joint type
8 固定螺纹管接头式 Joint type of fixed threaded pipe

接线盒形式 Junction box form

2 防喷式 Anti-spray type
3 防水式 Water-proof type

保护管直径 Diameter of protective tube

0 Φ16
1 Φ20
2 Φ16 高铝质管 High-aluminum tube
3 Φ20 高铝质管 High-aluminum tube

附加形式 Additional form

G 变截面 Variable cross-section
B 带温度变送器 With temperature transmitter

W R N 2 - 2 3 1 G 典型型号示例 Examples of typical model

接线盒形式 Junction box form

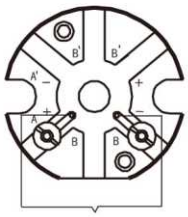

单支接线方法

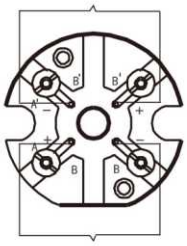

双支接线方法

无固定装置热电偶 Non-fixed assembly thermocouple

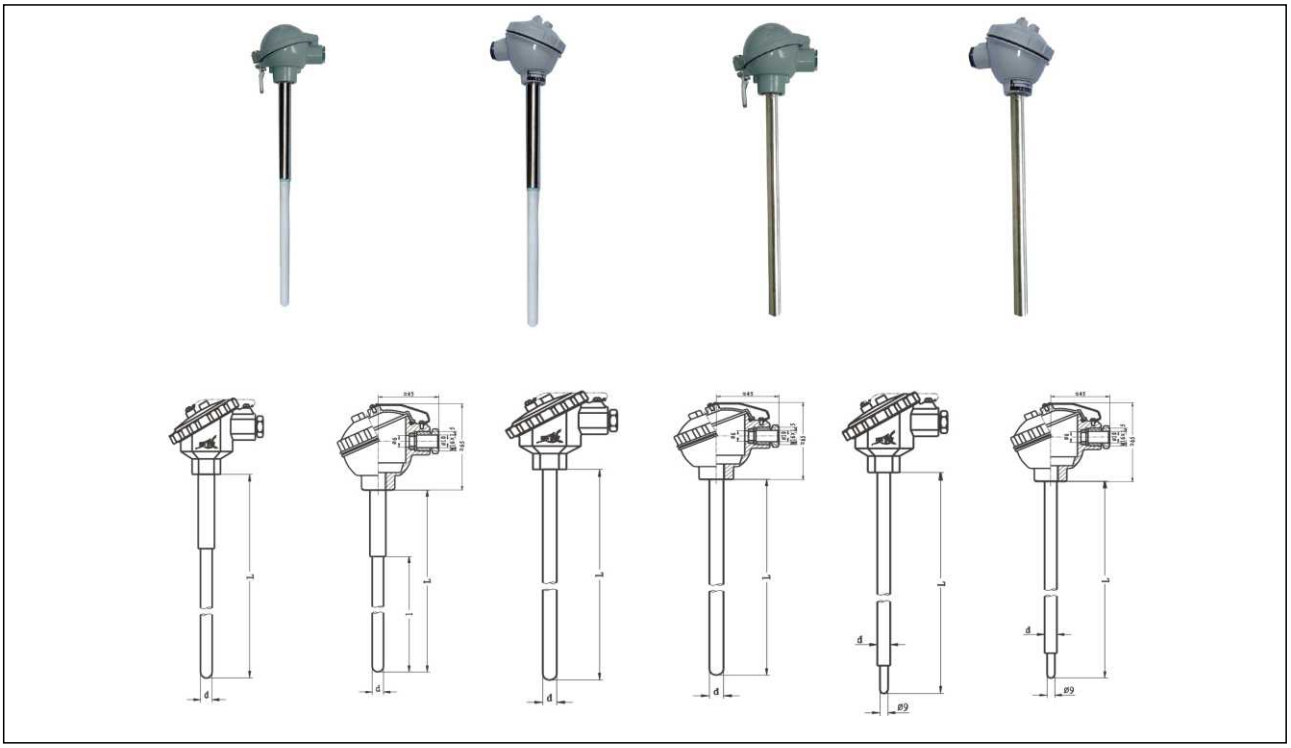

型 号 Model	分度号 Graduation	测温范围 ℃ Range of temperature measurement ℃	热响应时间 Thermal response time	保护管材质 Material for protective tube	规 格 Specification	
					d	L
WRM-122 WRM_2-122	N	0~1200	＜240s	高铝质 High-aluminum	Φ16	300×150 350×200 400×250 450×300 500×350 550×400 650×500 900×750 1150×1000 1650×1500 2150×2000
WRN-122 WRN_2-122	K					
WRM-123 WRM_2-123	N				Φ20	
WRN123 WRN_2-123	K					
WRM-132 WRM_2-132	N				Φ16	
WRN-132 WRN_2-132	K					
WRM-133 WRM_2-133	N				Φ20	
WRN-133 WRN_2-133	K					

1)型号122、123为防喷式，防护等级IP65；型号132、133为防水式，防护等级IP55；
2)保护管其余材质根据协议订货。

1) Model 122 and 123 are anti-spraying type with the protective grade being IP65; Model 122 and 123 are waterproof type with the waterproof grade being IP55;
2) The material for the rest protective tube is ordered according to the agreement.

型　号 Model	分度号 Graduation	测温范围 ℃ Range of temperature measurement ℃	热响应时间 Thermal response time	保护管材质 Material for protective tube	规格 Specification	
					d	L
WRM-130 WRM_2-130	N	0～800	＜90s	1Cr18Ni9Ti	Φ16	150 200 250 300 350 400 500 750 1000 1500 2000 2150
		0～1100		0Cr25Ni20		
WRM-130G WRM_2-130G		0～800	＜24s	1Cr18Ni9Ti		
		0～1100		0Cr25Ni20		
WRN-130 WRN_2-130	K	0～800	＜90s	1Cr18Ni9Ti		
		0～1100		0Cr25Ni20		
WRN-130G WRN_2-130G		0～800	＜24s	1Cr18Ni9Ti		
		0～1100		0Cr25Ni20		
WRE-130 WRE_2-130	E	0~800	＜90s	1Cr18Ni9Ti		
WRE-130G WRE_2-130G			＜24s			
WRC-130 WRC_2-130	T	0~350	＜90s	1Cr18Ni9Ti		
WRC-130G WRC_2-130G			＜24s			
WRF-130 WRF_2-130	J	0~600	＜90s	1Cr18Ni9Ti		
WRF-130G WRF_2-130G			＜24s			
WRM-131 WRM_2-131	N	0～800	＜90s	0Cr25Ni20	Φ20	
		0～1100		1Cr18Ni9Ti		
WRM-131G WRM_2-131G		0～800	＜24s	0Cr25Ni20		
		0～1100		1Cr18Ni9Ti		
WRN-131 WRN_2-131	K	0～800	＜120s	0Cr25Ni20		
		0～1100		1Cr18Ni9Ti		
WRN-131G WRN_2-131G		0～800	＜24s	0Cr25Ni20		
		0～1100		0Cr25Ni20		
WRE-131G WRE_2-131G	E	0~800	＜120s	1Cr18Ni9Ti		
WRE-131 WRE_2-131			＜24s			
WRC-131 WRC_2-131	T	0~350	＜120s	1Cr18Ni9Ti		
WRC-131G WRC_2-131G			＜24s			
WRF-131 WRF_2-131	J	0~600	＜120s	1Cr18Ni9Ti		
WRF-131G WRF_2-131G			＜24s			

1）型号130、131为防水式，防护等级IP55；
2）型号120、121为防喷式，防护等级IP65，其它参数同130、131；
3）保护管其余材质根据协议订货。

1) Model 130 and 131 are water proof type with the protective grade being IP55.
2) Model 120 and 121 are anti-spaying type with the waterproof grade being IP65; the other parameters are the same as model 130 and 131.
3) The material for the rest protective tube is ordered according to the agreement.

固定螺纹式热电偶 Fixed screw type thermocouple

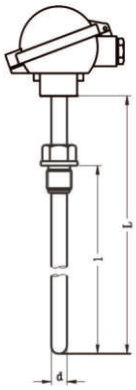

防水式230 231

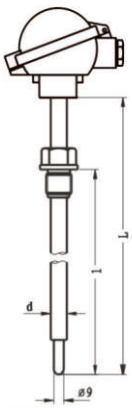

防水式230G 231G

型 号 Model	分度号 Graduation	测温范围 ℃ Range of temperature measurement ℃	热响应时间 Thermal response time	保护管材质 Material for protective tube	规 格 Specification d	规 格 Specification L
WRM-230 WRM_2-230	N	0~800	＜90s	1Cr18Ni9Ti	Φ16	300×150 350×200 400×250 450×300 500×350 550×400 650×500 900×750 1150×1000 1650×1500 2150×2000
		0~1100		0Cr25Ni20		
WRM-230G WRM_2-230G		0~800	＜24s	1Cr18Ni9Ti		
		0~1100		0Cr25Ni20		
WRN-230 WRN_2-230	K	0~800	＜90s	1Cr18Ni9Ti		
		0~1100		0Cr25Ni20		
WRN-230G WRN_2-230G		0~800	＜24s	1Cr18Ni9Ti		
		0~1100		0Cr25Ni20		
WRE-230 WRE_2-230	E	0~800	＜90s	1Cr18Ni9Ti		
WRE-230G WRE_2-230G			＜24s			
WRC-230 WRC_2-230	T	0~350	＜90s	1Cr18Ni9Ti		
WRC-230G WRC_2-230G			＜24s			
WRF-230 WRF_2-230	J	0~600	＜90s	1Cr18Ni9Ti		
WRF-230G WRF_2-230G			＜24s			
WRM-231 WRM_2-231	N	0～800	＜90s	1Cr18Ni9Ti	Φ20	
		0～1100		0Cr25Ni20		
WRM-231G WRM_2-231G		0～800	＜24s	1Cr18Ni9Ti		
		0～1100		0Cr25Ni20		
WRN-231 WRN_2-231	K	0～800	＜120s	1Cr18Ni9Ti		
		0～1100		0Cr25Ni20		
WRN-231G WRN_2-231G		0～800	＜24s	1Cr18Ni9Ti		
		0～1100		0Cr25Ni20		
WRE-231 WRE_2-231	E	0~800	＜120s	1Cr18Ni9Ti		
WRE-231G WRE_2-231G			＜24s			
WRC-231 WRC_2-231	T	0~350	＜120s	1Cr18Ni9Ti		
WRC-231G WRC_2-231G			＜24s			
WRF-231 WRF_2-231	J	0~600	＜120s	1Cr18Ni9Ti		
WRF-231G WRF_2-231G			＜24s			

1）型号230、231为防水式，防护等级IP55；型号220、221为防喷式，防护等级IP65，其它参数同230、231；

2）保护管其余材质根据协议订货；

3）公称压力为4MPa。

1) Model 230 and 231 are waterproof type type with the protective grade being IP55; Model 120 and 121 are anti-spraying type with the waterproof grade being IP65.the other parameters are the same as model 130 and 131.

2)The material for the rest protective tube is ordered according to the agreement.

3) Nominal pressure is 4MPa.

型号示例 No. of example	螺纹规格 Graduation		d
	代 号 Code	M	
WRN-230	-	M27×2	Φ16
WRN-230A	A	G3/4	
WRN-231G	-	M27×2	Φ20
WRN-231GA	A	G3/4	

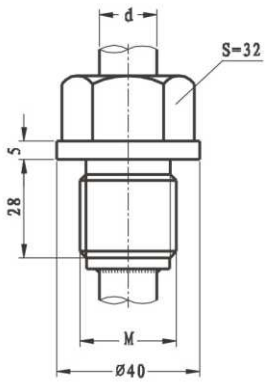

活动法兰式热电偶 Movable flange type thermocouple

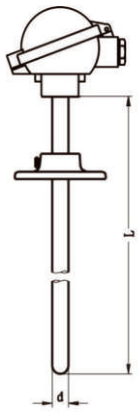

防水式330 331

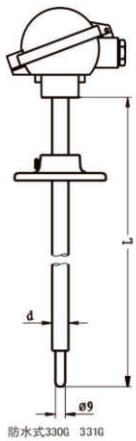

防水式330G 331G

型 号 Model	分度号 Graduation	测温范围 ℃ Range of temperature measurement ℃	热响应时间 Thermal response time	保护管材质 Material for protective tube	规 格 Specification d	规 格 Specification L
WRM-330 WRM_2-330	N	0~800	＜90s	1Cr18Ni9Ti	Φ16	150 200 250 300 350 400 500 750 1000 1500 2000 2150
		0~1100		0Cr25Ni20		
WRM-330G WRM_2-330G		0~800	＜24s	1Cr18Ni9Ti		
		0~1100		0Cr25Ni20		
WRN-330 WRN_2-330	K	0~800	＜90s	1Cr18Ni9Ti		
		0~1100		0Cr25Ni20		
WRN-330G WRN_2-330G		0~800	＜24s	1Cr18Ni9Ti		
		0~1100		0Cr25Ni20		
WRE-330 WRE_2-330	E	0~800	＜90s	1Cr18Ni9Ti		
WRE-330G WRE_2-330G			＜24s			
WRC-330 WRC_2-330	T	0~350	＜90s	1Cr18Ni9Ti		
WRC-330G WRC_2-330G			＜24s			
WRF-330 WRF_2-330	J	0~600	＜90s	1Cr18Ni9Ti		
WRF-330G WRF_2-330G			＜24s			
WRM-331 WRM_2-331	N	0～800	＜90s	1Cr18Ni9Ti	Φ20	
		0～1100		0Cr25Ni20		
WRM-331G WRM_2-331G		0～800	＜24s	1Cr18Ni9Ti		
		0～1100		0Cr25Ni20		
WRN-331 WRN_2-331	K	0～800	＜120s	1Cr18Ni9Ti		
		0～1100		0Cr25Ni20		
WRN-331G WRN_2-331G		0～800	＜24s	1Cr18Ni9Ti		
		0～1100		0Cr25Ni20		
WRE-331 WRE_2-231	E	0~800	＜120s	1Cr18Ni9Ti		
WRE-331G WRE_2-231G			＜24s			
WRC-331 WRC_2-231	T	0~350	＜120s	1Cr18Ni9Ti		
WRC-331G WRC_2-231G			＜24s			
WRF-331 WRF_2-231	J	0~600	＜120s	1Cr18Ni9Ti		
WRF-331G WRF_2-231G			＜24s			

1）型号330、331为防水式，防护等级IP55;
2）型号320、321为防喷式，防护等级IP65，其它参数同330、331;
3）保护管其余材质根据协议订货。

1) Model 330 and 331 are waterproof type type with the protective grade being IP55.
2) Model 320 and 321 are anti-spraying type with the waterproof grade being IP65. the other parameters are the same as model 130 and 131.
3) The other material for protective tubes are ordered according to the agreement.

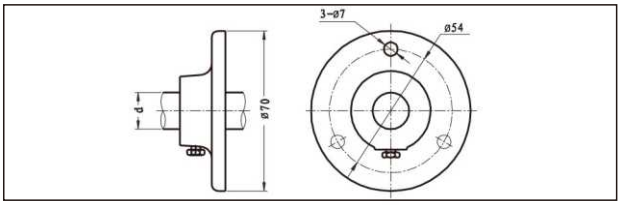

固定法兰式热电偶 Fixed flange type thermocouple

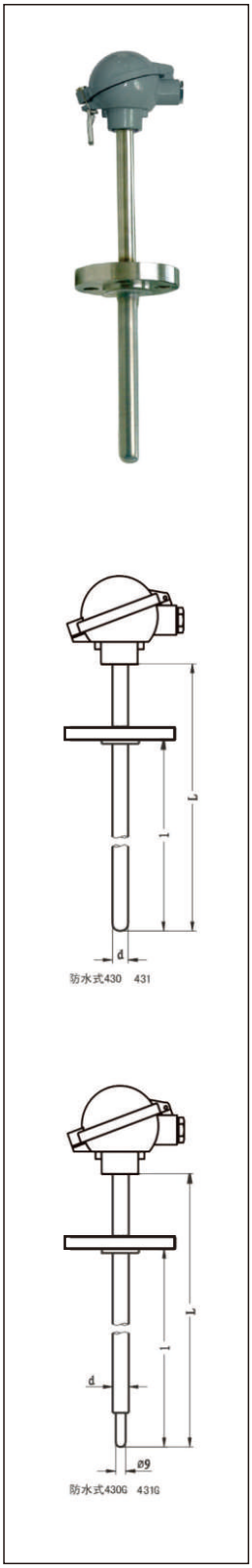

型 号 Model	分度号 Graduation	测温范围 ℃ Range of temperature measurement ℃	热响应时间 Thermal response time	保护管材质 Material for protective tube	规 格 Specification d	规 格 Specification L
WRM-430 WRM_2-430	N	0~800	＜90s	1Cr18Ni9Ti	Φ16	300×150 350×200 400×250 450×300 500×350 550×400 650×500 900×750 1150×1000 1650×1500 2150×2000
		0~1100		0Cr25Ni20		
WRM-430G WRM_2-430G		0~800	＜24s	1Cr18Ni9Ti		
		0~1100		0Cr25Ni20		
WRN-430 WRN_2-430	K	0~800	＜90s	1Cr18Ni9Ti		
		0~1100		0Cr25Ni20		
WRN-430G WRN_2-430G		0~800	＜24s	1Cr18Ni9Ti		
		0~1100		0Cr25Ni20		
WRE-430 WRE_2-430	E	0~800	＜90s	1Cr18Ni9Ti		
WRE-430G WRE_2-430G			＜24s			
WRC-430 WRC_2-430	T	0~350	＜90s	1Cr18Ni9Ti		
WRC-430G WRC_2-430G			＜24s			
WRF-430 WRF_2-430	J	0~600	＜90s	1Cr18Ni9Ti		
WRF-430G WRF_2-430G			＜24s			
WRM-431 WRM_2-431	N	0～800	＜120s	1Cr18Ni9Ti	Φ20	
		0～1100		0Cr25Ni20		
WRM-431G WRM_2-431G		0～800	＜24s	1Cr18Ni9Ti		
		0～1100		0Cr25Ni20		
WRN-431 WRN_2-431	K	0～800	＜120s	1Cr18Ni9Ti		
		0～1100		0Cr25Ni20		
WRN-431G WRN_2-431G		0～800	＜24s	1Cr18Ni9Ti		
		0～1100		0Cr25Ni20		
WRE-431 WRE_2-431	E	0~800	＜120s	1Cr18Ni9Ti		
WRE-431G WRE_2-431G			＜24s			
WRC-431 WRC_2-431	T	0~350	＜120s	1Cr18Ni9Ti		
WRC-431G WRC_2-431G			＜24s			
WRF-431 WRF_2-431	J	0~600	＜120s	1Cr18Ni9Ti		
WRF-431G WRF_2-431G			＜24s			

1）型号430、431为防水式，防护等级IP55；
2）型号420、421为防喷式，防护等级IP65，其它参数同430、431；
3）公称压力为4.0MPa。

1) Model 430 and 431 are waterproof type type with the protective grade being IP55;
2) Model 420 and 421 are anti-spraying type with the waterproof grade being IP65; the other parameters are the same as model 430 and 431.The material for the rest protective tube is ordered according to the agreement.
3) Nominal pressure is 4.0MPa.

型号示例 No. of example	法兰规格(mm) Flange specification(mm)				
	D	D_1	D_2	H	d
WRN-430	Φ95	Φ65	Φ46	14	Φ16
WRN-430G					
WRN-431	Φ95(Φ105)	Φ65(Φ75)	Φ46(Φ55)	14(16)	Φ20
WRN-431G					

可按用户约定要求提供法兰：详见P86

The flange can be provided according to the requirements of users: for the specific information, please refer to P86.

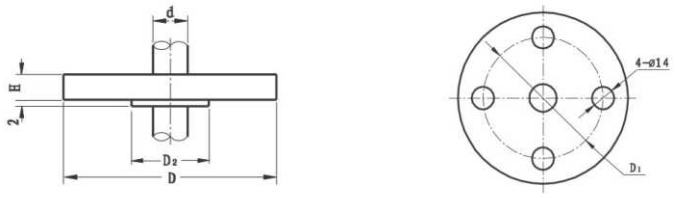

固定螺纹锥式热电偶 Fixed thread cone thermocouple

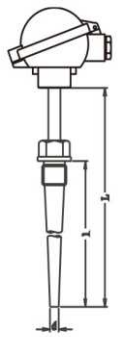

防喷式620 620A

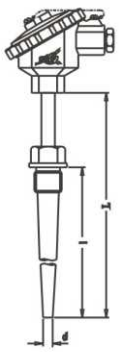

防水式630 630A

型 号 Model	分度号 Graduation	测温范围 ℃ Range of temperature measurement ℃	热响应时间 Thermal response time	保护管材质 Material for protective tube	规 格 Specification	
					d	L
WRM-620 WRM_2-620	N	0~800	<90s	1Cr18Ni9Ti	Φ15	300×150 350×200 400×250 450×300 500×350 550×400 650×500
		0~1100		0Cr25Ni20		
WRM-620G WRM_2-620G		0~800		1Cr18Ni9Ti		
		0~1100		0Cr25Ni20		
WRN-620 WRN_2-620	K	0~800		1Cr18Ni9Ti		
		0~1100		0Cr25Ni20		
WRN-620G WRN_2-620G		0~800		1Cr18Ni9Ti		
		0~1100		0Cr25Ni20		
WRE-620 WRE_2-620	E	0~800		1Cr18Ni9Ti		
WRE-620G WRE_2-620G						
WRC-620 WRC_2-620	T	0~350		1Cr18Ni9Ti		
WRC-620G WRC_2-620G						
WRF-620 WRF_2-620	J	0~600		1Cr18Ni9Ti		
WRF-620G WRF_2-620G						
WRM-630 WRM_2-630	N	0～800		1Cr18Ni9Ti		
		0～1100		0Cr25Ni20		
WRM-630G WRM_2-630G		0～800		1Cr18Ni9Ti		
		0～1100		0Cr25Ni20		
WRN-630 WRN_2-630	K	0～800		1Cr18Ni9Ti		
		0～1100		0Cr25Ni20		
WRN-630G WRN_2-630G		0～800		1Cr18Ni9Ti		
		0～1100		0Cr25Ni20		
WRE-630 WRE_2-630	E	0~800		1Cr18Ni9Ti		
WRE-630G WRE_2-630G						
WRC-630 WRC_2-630	T	0~350		1Cr18Ni9Ti		
WRC-630G WRC_2-630G						
WRF-630 WRF_2-630	J	0~600		1Cr18Ni9Ti		
WRF-630G WRF_2-630G						

1）型号620、620G为防喷式，防护等级IP65；型号630、630G为防水式，防护等级IP55；
2）保护管其余材质根据协议订货；
3）公称压力为≤15MPa。

1) Model 620 and 620G are anti-spraying type with the protective grade grade being IP65; Model 630 and 630G are waterproof type type with the protective grade being IP55;
2) The material for the rest protective tube is ordered according to the agreement.
3) Nominal pressure is: ≤15MPa.

型号示例 Examples of models	螺纹规格 Thread specification	
	代 号 Code	M
WRN-620	-	M33×2
WRN-620	A	NPT1
WRN-630	-	M33×2
WRN-630	A	NPT1

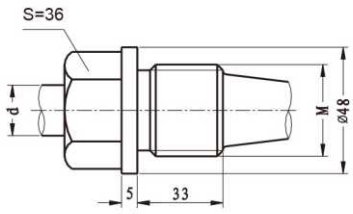

活络管接头式热电偶 Thermocouple of joint type of adjustable pipe

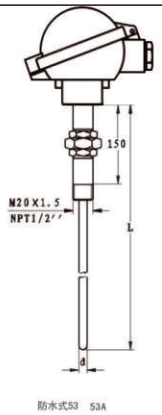

型 号 Model	分度号 Graduation	测温范围 ℃ Range of temperature measurement ℃	连接尺寸 Connection size	保护管材质 Material for protective tube	规 格 Specification	
					d	L
WRM-53 WRM_2-53	N	0~1100	M20×1.5	0Cr25Ni20	Φ3 Φ4 Φ5 Φ6 Φ8	245 270 295 345 395 445 545 645 745 899 1149
WRM-53A WRM_2-53A			NPT1/2			
WRN-53 WRN_2-53	K		M20×1.5	1Cr18Ni9Ti		
WRN-53A WRN_2-53A			NPT1/2			
WRE-53 WRE_2-53	E	0~700	M20×1.5			
WRE-53A WRE_2-53A			NPT1/2			
WRC-53 WRC_2-53	T	0~350	M20×1.5			
WRC-53A WRC_2-53A			NPT1/2			
WRF-53 WRF_2-53	J	0~600	M20×1.5			
WRF-53A WRF_2-53A			NPT1/2			

1）型号53、53A为防水式，防护等级IP55；
2）型号52、52A为防喷式，防护等级IP65，其它参数同53、53A；
3）如无特殊之约定，L 仅为参考尺寸，热电偶插入深度应为热安装套管U尺寸；
4）热安装套管形式详见P119。

1) Model 53 and 53A are waterproof type with the protective grade grade being IP55.
2) Model 52 and 52A are anti-spring type with the protective grade being IP65. The other parameters are the same as 53 and 53A.
3) If there is no special agreement, L is only the reference size. The insertion depth of thermocouple should be the size of thermal installation sleeve U.
4) The form of thermal mounting sleeve is shown in P119.

直形管接头式热电偶 Joint type thermocouple of straight pipe

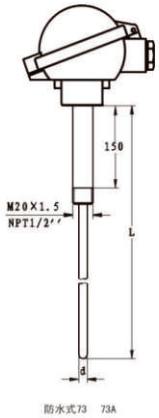

型 号 Model	分度号 Graduation	测温范围 ℃ Range of temperature measurement ℃	连接尺寸 Connection size	保护管材质 Material for protective tube	规 格 Specification	
					d	L
WRM-73 WRM_2-73	N	0~1100	M20×1.5	0Cr25Ni20	Φ3 Φ4 Φ5 Φ6 Φ8	245 270 295 345 395 445 545 645 745 899 1149
WRM-73A WRM_2-73A			NPT1/2			
WRN-73 WRN_2-73	K		M20×1.5	1Cr18Ni9Ti		
WRN-73A WRN_2-73A			NPT1/2			
WRE-73 WRE_2-73	E	0~700	M20×1.5			
WRE-73A WRE_2-53A			NPT1/2			
WRC-73 WRC_2-73	T	0~350	M20×1.5			
WRC-73A WRC_2-73A			NPT1/2			
WRF-73 WRF_2-73	J	0~600	M20×1.5			
WRF-73A WRF_2-73A			NPT1/2			

1）型号73、73A为防水式，防护等级IP55；
2）型号72、72A为防喷式，防护等级IP65，其它参数同73、73A；
3）如无特殊之约定，L 仅为参考尺寸，热电偶插入深度应为热安装套管U尺寸；
4）热安装套管形式详见P119。

1) Model 73 and 73A are waterproof type with the protective grade grade being IP55.
2) Model 72 and 72A are anti-spring type with the protective grade being IP65.
3) If there is no special agreement, L is only the reference size. The insertion depth of thermocouple should be the size of thermal installation sleeve U.
4) The form of thermal mounting sleeve is shown in P119.

固定螺纹管接头式热电偶　Joint type thermocouple of fixed thread pipe

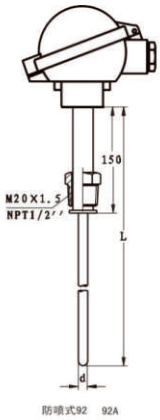

型　号 Model	分度号 Graduation	测温范围 ℃ Range of temperature measurement ℃	连接尺寸 Connection size	保护管材质 Material for protective tube	规　格 Specification	
					d	L
WRM-82 WRM_2-82	N	0~1100	M20×1.5	0Cr25Ni20	Φ3 Φ4 Φ5 Φ6 Φ8	245 270 295 345 395 445 545 645 745 899 1149
WRM-82A WRM_2-82A			NPT1/2			
WRN-82 WRN_2-82	K		M20×1.5	1Cr18Ni9Ti		
WRN-82A WRN_2-82A			NPT1/2			
WRE-82 WRE_2-82	E	0~700	M20×1.5			
WRE-82A WRE_2-82A			NPT1/2			
WRC-82 WRC_2-82	T	0~350	M20×1.5			
WRC-82A WRC_2-82A			NPT1/2			
WRF-82 WRF_2-82	J	0~600	M20×1.5			
WRF-82A WRF_2-82A			NPT1/2			

1）型号82、82A为防喷式，防护等级IP65；
2）型号83、83A为防水式，防护等级IP55，其它参数同82、82A；
3）如无特殊之约定，L仅为参考尺寸，热电偶插入深度应为热安装套管U尺寸；
4）热安装套管形式详见P119。

1) Model 82 and 82A are anti-spring type with the protective grade being IP65.
2) Model 83 and 83Aare waterproof type with the protective grade grade being IP55. Other parameters are the same as model 82 and 82A.
3) If there is no special agreement, L is only the reference size. The insertion depth of thermocouple should be the size of thermal installation sleeve U.
4) The form of thermal mounting sleeve is shown in P119.

安装形式 Installation type

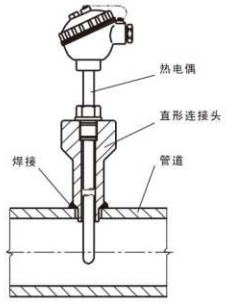

垂直管道安装形式

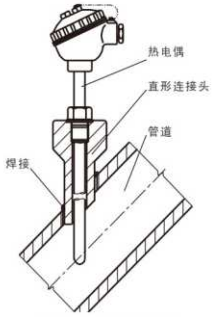

倾斜管道安装形式

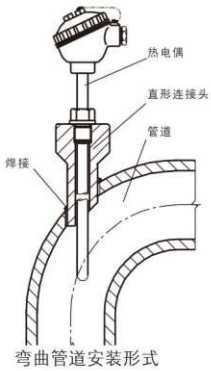

弯曲管道安装形式

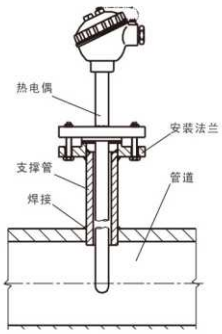

法兰安装形式

直形连接头 Straight joint

代 号 Code	M	D	D_1	D_2	d	h	H
TH48A	M12×1.5	Φ32	Φ18	Φ12	Φ7	27	60,120
TH48B	M16×1.5	Φ36	Φ18	Φ14	Φ7	27	80
TH48C	M20×1.5	Φ40	Φ18	Φ14	Φ7	27	60
TH48D	M27×2	Φ47	Φ28	Φ22	Φ17	32	60
TH48E	M33×2	Φ55	Φ36	Φ30	Φ21	34	120
TH48F	NPT1/2	Φ39	Φ27	Φ21	Φ16	35	60
TH48G	NPT3/4	Φ47	Φ31	Φ25	Φ20	40	
TH48H	NPT1	Φ47	Φ41	Φ35	Φ30	45	120

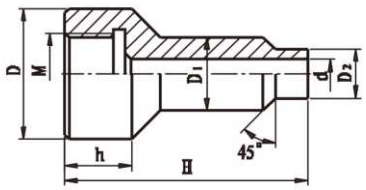

TH48□

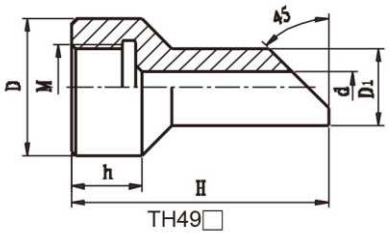

TH49□

代 号 Code	M	D	D_1	d	h	H
TH49A	M27×2	Φ47	Φ28	Φ18	30	90
TH49B	M33×2	Φ55	Φ36	Φ24	30	150
TH49C	NPT1/2	Φ39	Φ27	Φ16	30	90
TH49D	NPT3/4	Φ47	Φ31	Φ20	35	90
TH49E	NPT1	Φ47	Φ41	Φ30	40	150

防爆热电偶 Explosion proof thermocouple

应用

通常和显示仪表、记录仪表、电子计算机等配套使用。直接测量生产现场存在碳氢化合物等爆炸物的0℃～1300℃范围内液体、蒸汽和气体介质以及固体表面温度。

Application

It is usually used along with display instruments, recording instruments, electronic computers and so on. It is able to directly measure the temperature of liquid, steam and gas and solid surface in a variety of production field where there are explosives such as hydrocarbons and the temperature is within the range of 0 ~1300℃.

工作原理

防爆热电偶是利用间隙隔爆原理，设计具有足够强度的接线盒等部件，将所有会产生火花、电弧和危险温度的零部件都密封在接线盒腔内，当腔内发生爆炸时，能通过接合面间隙熄火和冷却，使爆炸后的火焰和温度传不到腔外，从而进行隔爆。

Working principle

Explosion-proof thermocouple uses the principle of interval explosion-proof with the junction box and other parts with enough strength where the dangerous parts which will generate spark, electric arc and dangerous temperature are sealed, so when the explosion occurs inside the cavity, the flame of the explosion can be cooled and distinguished in the gap between the joint surface so that the flame and the temperature will not be passed to the cavity. Finally, the explosion-proof is realized.

特点

多种防爆形式,防爆性能好;
压簧式感温元件,抗振性能好;
测量范围大;
机械强度高,耐压性能好。

Characteristics

A variety of explosion-proof forms with good explosion-proof performance;
Temperature sensing element of pressure-spring type, so it is of good anti-vibration performance;
Large range for measurement;
High mechanical strength and good pressure resistance;

主要技术参数

1.产品执行标准
EC584，GB/T16839-1997，GB26786-2011，Gb3836。
2.常温绝缘电阻
热电偶在环境温度为20±15℃,相对湿度不大于80%,试验电压为500±50V（直流）电极与外套管之间的绝缘电阻≥1000MΩ.m。即1m长的试样的绝缘电阻为1000MΩ;10m长的试样的绝缘电阻为100MΩ;

Main technical parameters

1.Product implementation standard
IEC584,GB/T16839-1997,GB26786-2011,Gb3836.
2.Insulation resistance in normal temperature
For thermocouple, the environment temperature is 20+15℃, the relative humidity is not more than 80%, the test voltage is 500 + 50V(DC), the insulation resistance between electrode and outer sleeve≥1000MΩ.m.
That is to say, the insulation resistance for sample of 1m is 1000MΩ; the insulation resistance for sample of 10m is 100MΩ.

取证一览表

Evidence list

防爆级别 Explosion-proof grade	防爆证号 Number of explosion-proof	认证机构 Certification body
dⅡBT4	GYB997151	NEPSI
dⅡCT5	GYB02475	NEPSI
iaⅡCT6	GYB05363X	NEPSI

注：NEPSI防爆认证系国家级仪器仪表

Note: NEPSI explosion-proof certification department certified the national instruments and meters

型　号 Model	分度号 Graduation	允差等级 Tolerance level			
		Ⅰ		Ⅱ	
		允差值 Tolerance value	测温范围 ℃ Range of temperature measurement ℃	允差值 Tolerance value	测温范围 ℃ Range of temperature measurement ℃
WRN	K	±1.5℃	-40~+375	±2.5℃	-40~+333
		±0.004|t|	375~1000	±0.0075|t|	333~1200
WRM	N	±1.5℃	-40~+375	±2.5℃	-40~+333
		±0.004|t|	375~1000	±0.0075|t|	333~1200
WRE	E	±1.5℃	-40~+375	±2.5℃	-40~+333
		±0.004|t|	375~800	±0.0075|t|	333~900
WRF	J	±1.5℃	-40~+375	±2.5℃	-40~+333
		±0.004|t|	375~750	±0.0075|t|	333~750
WRC	T	±0.5℃	-40~+125	±1.0℃	-40~+133
		±0.004|t|	125~350	±0.0075|t|	133~350

防爆分组形式 Grouping for explosion-proof

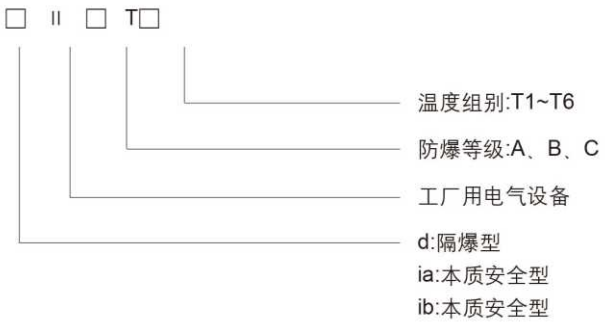

电气设备类别

Ⅰ类——煤矿井下用电气设备
Ⅱ类——工厂用电气设备

Types of electrical equipment

Ⅰ——Electrical equipment for underground coal mine
Ⅱ——Electrical equipment used in factory

防爆等级

防爆热电偶的防爆等级按其使用于爆炸性气体混合物最大试验安全间隙分为A、B、C三级。

Explosion-proof grade

Explosion proof grade of explosion-proof thermocouple according to maximum test safety clearance of mixture of explosive gas is divided into A, B, C.

类别 Explosion-proof grade	级别 Number of explosion-proof	最大试验安全间隙（MESG）mm Maximum test safety clearance（MESG）mm
	A	0.9≤MESG
II	B	0.5＜MESG＜0.9
	C	MESG≤0.5

温度组别

防爆热电偶的温度组别按其外露部分允许最高面温度分为T1~T6。

Temperature group

Temperature groups of explosion-proof thermocouple is divided into T1~T6 according to maximum surface temperature of the exposed part.

温度组别 Temperature group	允许最高表面温度℃ Maximum surface temperature of the exposed part℃
T1	450
T2	300
T3	200
T4	135
T5	100
T6	85

防爆级别 Explosion-proof grade

EXd II □T□
EXia II □T□
EXib II □T□

防护等级 Protection level

Ip65

接线盒形式

Junction box form

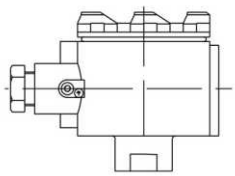

安装端子形式

Type of mounting terminal

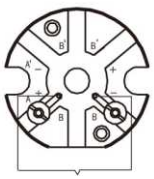

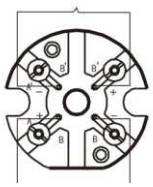

型号命名方法 Naming method for model

W 温度仪表 Temperature instrument

R 热电偶 Thermocouple

感温元件材料 Material for temperature-sensing element

M 镍铬硅-镍硅 Nichrome-nickel silicon
N 镍铬-镍硅 Nickel chromium-nickel silicon
E 镍铬-铜镍 Nickel chromium-copper nickel
C 铜-铜镍 Copper-copper nickel
F 铁-铜镍 Iron-copper nickel

偶丝对数 Number of thermal wire couple

无 单支 Non, single support
2 双支 2 double support

安装固定形式 Installation and fixation form

2 固定螺纹 Fixed screw thread
4 固定法兰 Fixed flange
5 活络管接头式 Adjustable pipe joint type
6 固定螺纹锥形式 Fixed thread cone form
7 直形管接头式 Straight pipe joint type
8 固定螺纹管接头式 Joint type of fixed threaded pipe

接线盒形式 Junction box form

4 防爆式 Junction box form

保护管直径 Diameter of protective tube

0 Φ16
1 Φ20

附加形式 Additional form

G 变截面 Variable cross-section
B 带温度变送器 With temperature transmitter

W	R	N	$_2$	-	2	4	1	G	典型型号示例 Examples of typical model

固定螺纹式热电偶 Thermocouple of fixed screw type

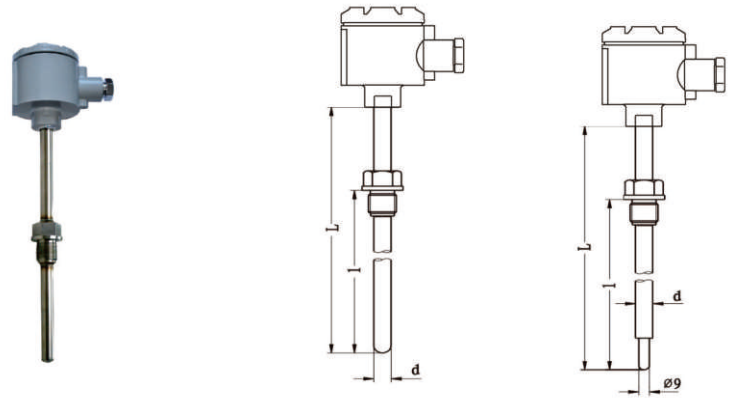

型 号 Model	分度号 Graduation	测温范围 ℃ Range of temperature measurement ℃	热响应时间 Thermal response time	保护管材质 Material for protective tube	规 格 Specification	
					d	L
WRM-240 WRM_2-240	N	0~800	＜90s	1Cr18Ni9Ti	Φ16	300×150 350×200 400×250 450×300 500×350 550×400 650×500 900×750 1150×1000 1650×1500 2150×2000
		0~1100		0Cr25Ni20		
WRM-240G WRM_2-240G		0~800	＜24s	1Cr18Ni9Ti		
		0~1100		0Cr25Ni20		
WRN-240 WRN_2-240	K	0~800	＜90s	1Cr18Ni9Ti		
		0~1000		0Cr25Ni20		
WRN-240G WRN_2-240G		0~800	＜24s	1Cr18Ni9Ti		
		0~1000		0Cr25Ni20		
WRE-240 WRE_2-240	E	0~800	＜90s	1Cr18Ni9Ti		
WRE-240G WRE_2-240G			＜24s			
WRC-240 WRC_2-240	T	0~350	＜90s	1Cr18Ni9Ti		
WRC-240G WRC_2-240G			＜24s			
WRF-240 WRF_2-240	J	0~600	＜90s	1Cr18Ni9Ti		
WRF-240G WRF_2-240G			＜24s			

1)热电偶Ⅰ级按协议订货；
2)保护管其余材质根据协议订货；
3)公称压力≤4MPa。

1) Thermocouple I is ordered according to the agreement.
2) The material for the rest protective tube is ordered according to the agreement.
3) Nominal pressure is: ≤4MPa.

型号示例 Examples of models	螺纹规格 Thread specification	
	代 号 Code	M
WRN- 240		M27×2
WRN- 240A	A	G 3/4
WRN- 240G		M27×2
WRN- 241A	A	G 3/4

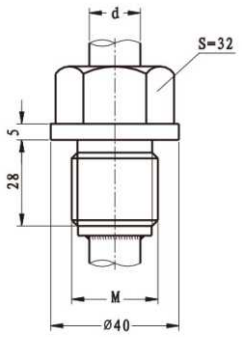

固定法兰式热电偶 Fixed flange type thermocouple

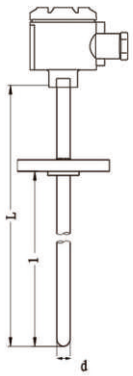

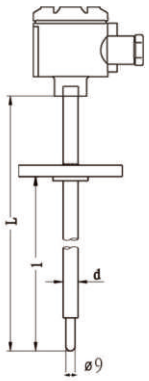

型 号 Model	分度号 Graduation	测温范围 ℃ Range of temperature measurement ℃	热响应时间 Thermal response time	保护管材质 Material for protective tube	规 格 Specification	
					d	L
WRM-440 WRM_2-440	N	0~800	<90s	1Cr18Ni9Ti	Φ16	300×150 350×200 400×250 450×300 500×350 550×400 650×500 900×750 1150×1000 1650×1500 2150×2000
		0~1100		0Cr25Ni20		
WRM-440G WRM_2-440G		0~800	<24s	1Cr18Ni9Ti		
		0~1100		0Cr25Ni20		
WRN-440 WRN_2-440	K	0~800	<90s	1Cr18Ni9Ti		
		0~1000		0Cr25Ni20		
WRN-440G WRN_2-440G		0~800	<24s	1Cr18Ni9Ti		
		0~1000		0Cr25Ni20		
WRE-440 WRE_2-440	E	0~800	<90s	1Cr18Ni9Ti		
WRE-440G WRE_2-440G			<24s			
WRC-440 WRC_2-440	T	0~350	<90s	1Cr18Ni9Ti		
WRC-440G WRC_2-440G			<24s			
WRF-440 WRF_2-440	J	0~600	<90s	1Cr18Ni9Ti		
WRF-440G WRF_2-440G			<24s			

1)热电偶Ⅰ级按协议订货；
2)保护管其余材质根据协议订货；
3)公称压力≤4MPa。

1) Thermocouple I is ordered according to the agreement.
2) The material for the rest protective tube is ordered according to the agreement.
3) Nominal pressure is: ≤4MPa.

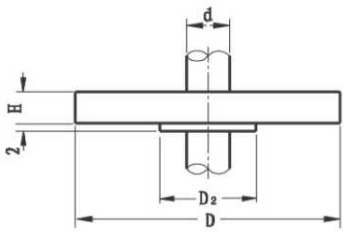

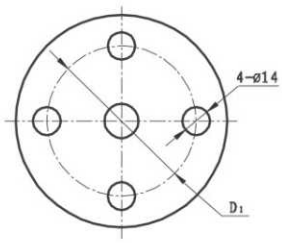

活络管接头式热电偶 Thermocouple of joint type of adjustable pipe

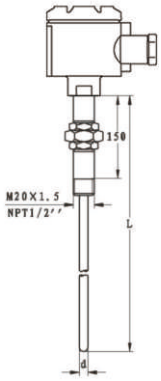

型号 Model	分度号 Graduation	测温范围 ℃ Range of temperature measurement ℃	连接尺寸 Connection size	规格 Specification	
				d	L
WRM-54 WRM_2-54	N	0~1100	M20×1.5	Φ3 Φ4 Φ5 Φ6 Φ8	250 275 300 350 400 450 550 650 750 900 1150
		0~800			
WRM-54A WRM_2-54A		0~1000	NPT1/2		
		0~800			
WRN-54 WRN_2-54	K	0~1000	M20×1.5		
		0~800			
WRN-54A WRN_2-54A		0~1000	NPT1/2		
		0~800			
WRE-54 WRE_2-54	E	0~600	M20×1.5		
WRE-54A WRE_2-54A			NPT1/2		
WRC-54 WRC_2-54	T	0~350	M20×1.5		
WRC-54A WRC_2-54A			NPT1/2		
WRF-54 WRF_2-54	J	0~500	M20×1.5		
WRF-54A WRF_2-54A			NPT1/2		

1)热电偶Ⅰ级按协议订货；
2)如无特殊之约定，L仅为参考尺寸，热电偶插入深度应为热安装套管U尺寸；
3)热安装套管形式详见P119。

1) Thermocouple I is ordered according to the agreement.
2)If there is no special agreement, L is only the reference size. The insertion depth of thermocouple should be the size of thermal installation sleeve U.
3) The form of thermal mounting sleeve is shown in P119.

直型管接头式热电偶 Straight pipe joint type thermocouple

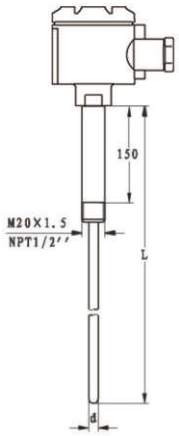

型号 Model	分度号 Graduation	测温范围 ℃ Range of temperature measurement ℃	连接尺寸 Connection size	规格 Specification	
				d	L
WRM-74 WRM_2-74	N	0~1100	M20×1.5	Φ3 Φ4 Φ5 Φ6 Φ8	250 275 300 350 400 450 550 650 750 900 1150
		0~800			
WRM-74A WRM_2-74A		0~1000	NPT1/2		
		0~800			
WRN-74 WRN_2-74	K	0~1000	M20×1.5		
		0~800			
WRN-74A WRN_2-74A		0~1000	NPT1/2		
		0~800			
WRE-74 WRE_2-74	E	0~600	M20×1.5		
WRE-74A WRE_2-74A			NPT1/2		
WRC-74 WRC_2-74	T	0~350	M20×1.5		
WRC-74A WRC_2-74A			NPT1/2		
WRF-74 WRF_2-74	J	0~500	M20×1.5		
WRF-74A WRF_2-74A			NPT1/2		

1)热电偶Ⅰ级按协议订货；
2)如无特殊之约定，L仅为参考尺寸，热电偶插入深度应为热安装套管U尺寸；
3)热安装套管形式详见P119。

1) Thermocouple I is ordered according to the agreement.
2)If there is no special agreement, L is only the reference size. The insertion depth of thermocouple should be the size of thermal installation sleeve U.
3) The form of thermal mounting sleeve is shown in P119.

固定螺纹管接头式热电偶 Joint type thermocouple of fixed thread pipe

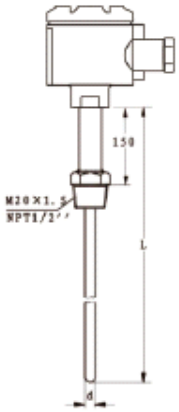

型号 Model	分度号 Graduation	测温范围 ℃ Range of temperature measurement ℃	连接尺寸 Connection size	规格 Specification	
				d	L
WRM-84 WRM_2-84	N	0~1100	M20×1.5	Φ3 Φ4 Φ5 Φ6 Φ8	250 275 300 350 400 450 550 650 750 900 1150
		0~800			
WRM-84A WRM_2-84A		0~1000	NPT1/2		
		0~800			
WRN-84 WRN_2-84	K	0~1000	M20×1.5		
		0~800			
WRN-84A WRN_2-84A		0~1000	NPT1/2		
		0~800			
WRE-84 WRE_2-84	E	0~600	M20×1.5		
WRE-84A WRE_2-84A			NPT1/2		
WRC-84 WRC_2-84	T	0~350	M20×1.5		
WRC-84A WRC_2-84A			NPT1/2		
WRF-84 WRF_2-84	J	0~500	M20×1.5		
WRF-84A WRF_2-84A			NPT1/2		

1)热电偶Ⅰ级按协议订货；
2)如无特殊之约定，L仅为参考尺寸，热电偶插入深度应为热安装套管U尺寸；
3)热安装套管形式详见P119。

1) Thermocouple I is ordered according to the agreement.
2) If there is no special agreement, L is only the reference size. The insertion depth of thermocouple should be the size of thermal installation sleeve U.
3) The form of thermal mounting sleeve is shown in P119.

铠装热电阻 Sheathed thermal resistance

应用

通常和显示仪表、记录仪表、电子计算机等配套使用。直接测量各种生产过程中的-200℃～500℃范围内液体、蒸汽和气体介质以及固体表面温度。

Application

It is usually used along with display instruments, recording instruments, electronic computers and so on. It is able to directly measure the temperature of liquid, steam and gas and solid surface within the range of -200℃～500℃.

工作原理

铠装热电阻是利用物质在温度变化时，其电阻也随着发生变化的特征来测量温度的。当阻值变化时，工作仪表便显示出阻值所对应的温度值。

Working principle

Sheathed thermal resistance uses the feature that when the temperature of the material changes, its resistance will change too. When the resistance changes, the instrument will display relevant temperature corresponding to the resistance.

特点

热响应时间少，减小动态误差；
直径小，长度不受限制；
测量精确度高；
进口薄膜电阻元件，性能可靠稳定。

Characteristics

Less thermal response time, which can reduce the dynamic error;
Small diameter, so the length is not limited;
High measurement accuracy;
Imported thin-film resistor with reliable and stable performance;

主要技术参数

产品执行标准：IEC60751，GB/T30121-2013。

Main technical parameters

Product implementation standard:IEC60751,GB/T30121-2013.

偶丝直径材料 Material in the diameter of thermocouple wire

偶丝形式 Thermocouple wire type	单支式 Single support	双支式 Double support
套管直径 Casing diameter	Φ3, Φ4, Φ5, Φ6, Φ8 Φ4, Φ5, Φ6, Φ8	Φ4, Φ5, Φ6, Φ8
套管材质 Casing material	1Cr18Ni9Ti	1Cr18Ni9Ti

允差等级 Tolerance level

分度号 Graduation	允差等级 Tolerance level	有效温度范围/℃ Effective temperaturerange		允差℃ Range of temperature measurement ℃
		线绕元件 Wire wound element	膜式元件 Membrane element	
Pt100	AA	-50~250	0~150	±（0.1+0.0017 | t | ）
	A	-100~450	-30~300	±（0.15+0.002 | t | ）
	B	-196~600	-50~500	±（0.3+0.005 | t | ）
	C	-196~600	-50~600	±（0.6+0.01 | t | ）

| t | =温度绝对值，单位为℃
t = temperature Absolute value, units for C

热响应时间 Thermal response time

套管直径 Casing diameter	热响应时间s Thermal response time s
Φ3	≤3
Φ4	≤5
Φ5	≤8
Φ6	≤12
Φ8	≤15

测量端结构形式 Structure form of the measuring terminal

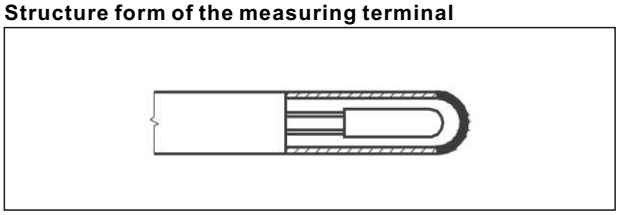

安装方式 Installation method

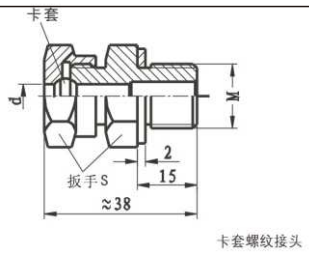

代号和尺寸 Code and size	铠装阻外径 The outer diameter of sheathed resistance	
	Φ8, Φ6, Φ5	Φ4, Φ3
M	M16×1.5	M12×1.5
S	22	19

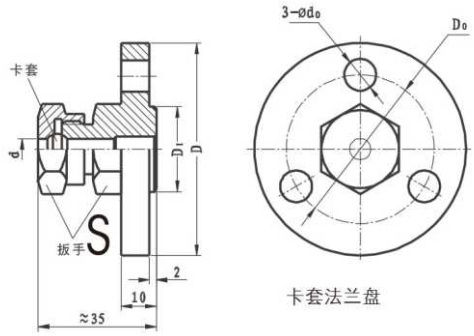

代号和尺寸 Code and size	铠装阻外径 The outer diameter of sheathed resistance	
	Φ8, Φ6, Φ5	Φ4, Φ3
D	Φ60	Φ50
D_0	Φ42	Φ36
D_1	Φ24	Φ20
S	Φ22	Φ19
d_0	Φ9	Φ7

型号命名方法 Naming method for model

W 温度仪表 Temperature instrument

Z 热电阻 Thermal resistance

P 感温元件材料 Material for temperature-sensing element

K 铠装式 Number of thermal wire couple

偶丝对数 Number of thermal wire couple

无 单支 Non, single support
2 双支 2 double support

安装固定装置 Installation and fixation mode

1 无固定装置 Non-fixing device
2 固定卡套螺纹 Fixed-sleeve screw thread
3 活动卡套螺纹 Active-sleeve screw thread
4 固定卡套法兰 Fixed-sleeve flange
5 活动卡套法兰 Active-sleeve flange

接线盒形式 Junction box form

3 防水式 Water-proof type
6 圆接插式 Circular interpolation
7 扁接插式 Flat socket
9 补偿导线式 Compensating wire type
0 感温元件 Temperature-sensing element

直径 Diameter of protective tube

3 Φ3
4 Φ4
5 Φ5
6 Φ6
8 Φ8

W	Z	P	K	$_2$	-	2	3	6	典型型号示例 Examples of typical model

接线盒形式 Junction box form

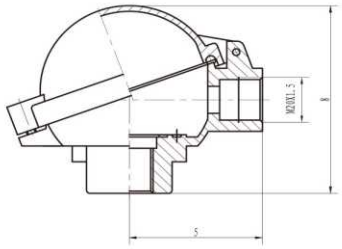

防水式

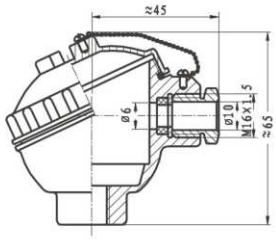

防喷式

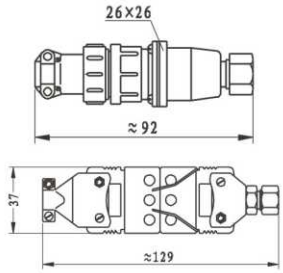

圆接插式

扁接插式

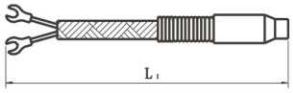

带补偿导线式

接线方式 Wire-connection mode

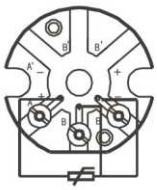

单支接线方法

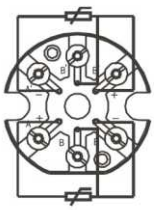

双支接线方法

感温元件 Temperature-sensing element

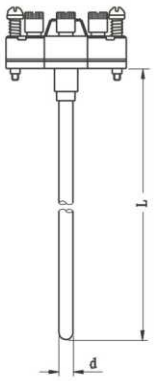

名 称 Model	型 号 Graduation	分度号 Graduation	测温范围 ℃ Range of temperature measurement ℃	规格 Specification	
				d	L
单支铂热电阻 Single platinum thermal resistance	WZP-101	Pt100	A级 −30-300	Φ3 Φ4 Φ5 Φ6	310 360 410 460 510 560
双支铂热电阻 Single platinum thermal resistance	WZP_2-101		B级 −50-500		

防水式铠装热电阻 Waterproof type sheathed thermal resistance

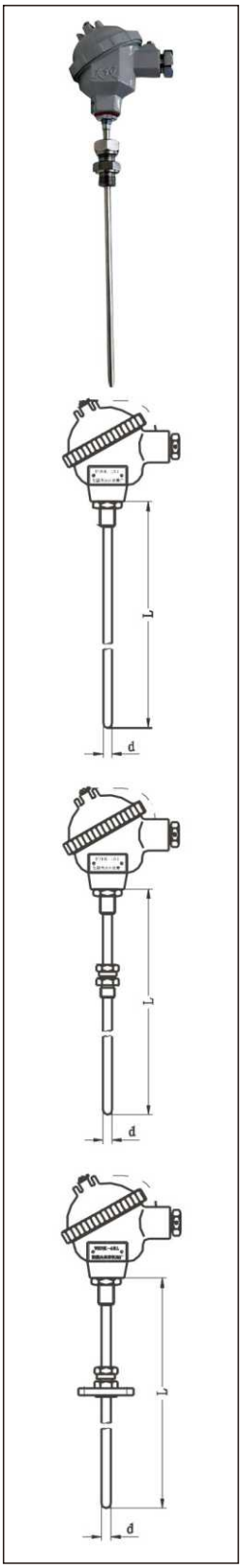

型号 Model	分度号 Graduation	测温范围 ℃ Range of temperature measurement ℃	等 级 Grade	安装固定装置 Installation and fixation device
WZPK-133	Pt100	A级 −30-300 B级 −50-500	A级或B级 A or B	无固定装置 No fixation device
WZPK-134				
WZPK-135				
WZPK-136				
WZPK-138				
$WZPK_2$-134				
$WZPK_2$-135				
$WZPK_2$-136				
$WZPK_2$-138				
WZPK-233				固定卡套螺纹 Fixed-sleeve screw thread
WZPK-234				
WZPK-235				
WZPK-236				
WZPK-238				
$WZPK_2$-234				
$WZPK_2$-235				
$WZPK_2$-236				
$WZPK_2$-238				
WZPK-333				可动卡套螺纹 Movable-sleeve screw thread
WZPK-334				
WZPK-335				
WZPK-336				
WZPK-338				
$WZPK_2$-334				
$WZPK_2$-335				
$WZPK_2$-336				
$WZPK_2$-338				
WZPK-433				固定卡套法兰 Fixed-sleeve screw flange
WZPK-434				
WZPK-435				
WZPK-436				
$WZPK_2$-438				
WZPK-434				
WZPK-435				
WZPK-436				
$WZPK_2$-438				
WZPK-533				可动卡套法兰 Active-sleeve flange
WZPK-534				
WZPK-535				
WZPK-536				
WZPK-538				
$WZPK_2$-534				
$WZPK_2$-535				
$WZPK_2$-536				
$WZPK_2$-538				

1)铠装阻防护等级IP55；
2)热电阻A级按协议订货；
3)未注明测温范围及保护管材质,保护管材质一律视为1Cr18Ni9Ti。

1) Protection grade of sheathed resistance IP55.
2) Thermocouple I is ordered according to the agreement.
3) The material of protective tube is 1Cr18Ni9Ti if the temperature scope and material are noted.

圆接插式铠装热电阻 Sheath thermal resistance of circular interpolation type

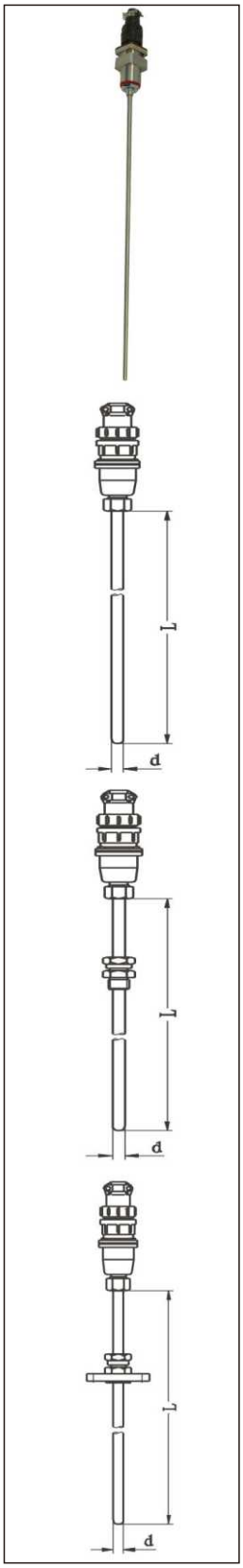

型号 Model	分度号 Graduation	测温范围 ℃ Range of temperature measurement ℃	等 级 Grade	安装固定装置 Installation and fixation device
WZPK-163	Pt100	A级 −30-300 B级 −50-500	A级或B级 A or B	无固定装置 No fixation device
WZPK-164				
WZPK-165				
WZPK-166				
WZPK-168				
$WZPK_2$-164				
$WZPK_2$-165				
$WZPK_2$-166				
$WZPK_2$-168				
WZPK-263				固定卡套螺纹 Fixed-sleeve screw thread
WZPK-264				
WZPK-265				
WZPK-266				
WZPK-268				
$WZPK_2$-264				
$WZPK_2$-265				
$WZPK_2$-266				
$WZPK_2$-268				
WZPK-363				可动卡套螺纹 Movable-sleeve screw thread
WZPK-364				
WZPK-365				
WZPK-366				
WZPK-368				
WZPK-364				
WZPK-365				
WZPK-366				
WZPK-368				
$WZPK_2$-463				固定卡套法兰 Fixed-sleeve screw flange
$WZPK_2$-464				
$WZPK_2$-465				
$WZPK_2$-466				
WZPK-468				
WZPK-464				
WZPK-465				
WZPK-466				
$WZPK_2$-468				
WZPK-563				可动卡套法兰 Active-sleeve flange
WZPK-564				
WZPK-565				
$WZPK_2$-566				
WZPK-568				
WZPK-564				
WZPK-565				
WZPK-566				
WZPK-568				

1)铠装阻防护等级IP55;
2)热电阻A级按协议订货;
3)未注明测温范围及保护管材质,保护管材质一律视为1Cr18Ni9Ti。

1) Protection grade of sheathed resistance IP55.
2) Thermocouple I is ordered according to the agreement.
3) The material of protective tube is 1Cr18Ni9Ti if the temperature cope and material are noted.

扁接插式铠装热电阻 Sheath thermal resistance of flat socket type

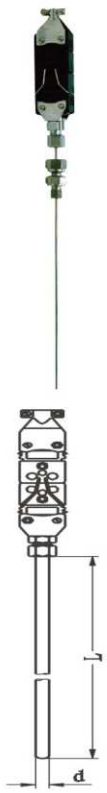

型号 Model	分度号 Graduation	测温范围 ℃ Range of temperature measurement ℃	等 级 Grade	安装固定装置 Installation and fixation device
WZPK-173	Pt100	A级 -30-300 B级 -50-500	A级或B级 A or B	无固定装置 No fixation device
WZPK-174				
WZPK-175				
WZPK-176				
WZPK-178				
WZPK-273				固定卡套螺纹 Fixed-sleeve screw thread
WZPK-274				
WZPK-275				
WZPK-276				
WZPK-278				
WZPK-373				可动卡套螺纹 Movable-sleeve screw thread
WZPK-374				
WZPK-375				
WZPK-376				
$WZPK_2$-378				
$WZPK_2$-473				固定卡套法兰 Fixed-sleeve screw flange
$WZPK_2$-474				
$WZPK_2$-475				
WZPK-476				
WZPK-478				
WZPK-573				可动卡套法兰 Active-sleeve flange
WZPK-574				
WZPK-575				
WZPK-576				
WZPK-578				

1)铠装阻防护等级IP55;
2)热电阻A级按协议订货;
3)未注明测温范围及保护管材质,保护管材质一律视为1Cr18Ni9Ti。

1) Protection grade of sheathed resistance IP55.
2) Thermocouple I is ordered according to the agreement.
3) The material of protective tube is 1Cr18Ni9Ti if the temperature scope and material are noted.

补偿导线式铠装热电阻 The compensation wire sheathed thermal resistance

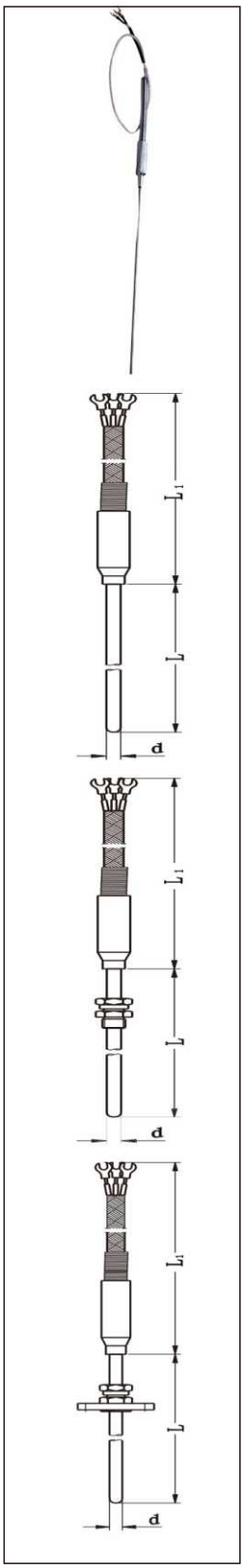

型号 Model	分度号 Graduation	测温范围 ℃ Range of temperature measurement ℃	等 级 Grade	安装固定装置 Installation and fixation device
WZPK-193	Pt100	A级 -30-300 B级 -50-500	A级或B级 A or B	无固定装置 No fixation device
WZPK-194				
WZPK-195				
WZPK-196				
WZPK-198				
$WZPK_2$-194				
$WZPK_2$-195				
$WZPK_2$-196				
$WZPK_2$-198				
WZPK-293				固定卡套螺纹 Fixed-sleeve screw thread
WZPK-294				
WZPK-295				
WZPK-296				
WZPK-298				
$WZPK_2$-294				
$WZPK_2$-295				
$WZPK_2$-296				
$WZPK_2$-298				
WZPK-393				可动卡套螺纹 Movable-sleeve screw thread
WZPK-394				
WZPK-395				
WZPK-396				
WZPK-398				
WZPK-394				
WZPK-395				
WZPK-396				
WZPK-398				
$WZPK_2$-493				固定卡套法兰 Fixed-sleeve screw flange
$WZPK_2$-494				
$WZPK_2$-495				
$WZPK_2$-496				
WZPK-498				
WZPK-494				
WZPK-495				
WZPK-496				
$WZPK_2$-498				
WZPK-593				可动卡套法兰 Active-sleeve flange
WZPK-594				
WZPK-595				
$WZPK_2$-596				
WZPK-598				
WZPK-574				
WZPK-595				
WZPK-596				
WZPK-598				

1)铠装阻防护等级IP55;
2)热电阻A级按协议订货;
3)未注明测温范围及保护管材质,保护管材质一律视为1Cr18Ni9Ti。

1) Protection grade of sheathed resistance IP55.
2) Thermocouple I is ordered according to the agreement.
3) The material of protective tube is 1Cr18Ni9Ti if the temperature scope and material are noted.

装配热电阻 Assembling thermal resistance

应用

通常和显示仪表、记录仪表、电子计算机等配套使用。直接测量各种生产过程中的-200℃~500℃范围内液体、蒸汽和气体介质以及固体表面测温。

Application

It is usually used along with display instruments, recording instruments, electronic computers and so on. It is able to directly measure the temperature of liquid, steam and gas and solid surface within the range of -200℃～500℃.

工作原理

热电阻是利用物质在温度变化时，其电阻随着发生变化的特征来测量温度的。当阻值变化时，工作仪表便显示出阻值所对应的温度值

Working principle

Thermal resistance uses the feature that when the temperature of the material changes, its resistance will change too. When the resistance changes, the instrument will display relevant temperature corresponding to the resistance.

特点

1.压簧式感温元件，抗振性能好；
2.毋须补偿导线，节省费用；
3.测量精度高;
4.机械强度高，耐压性能好;
5.进口薄膜电阻元件，性能可靠稳定;

Characteristics

1. With temperature-sensing element of pressure spring type, so it has good anti-vibration performance;
2. With no compensation wire, which is cost-saving
3. High measurement accuracy;
4. High mechanical strength, good pressure resistance;
5. Imported thin-film resistor with reliable and stable performance;

主要技术参数

产品执行标准：IEC60751，GB/T30121-2013，JB/T8623-1997。

Main technical parameters

Product implementation standard:IEC60751, GB/T30121-2013,JB/T 8623-1997.

测温范围及允差等级

Temperature range and tolerance level

分度号 Graduation	允差等级 Tolerance level	有效温度范围/℃ Effective temperaturerange		允差℃ Range of temperature measurement ℃
		线绕元件 Wire wound element	膜式元件 Membrane element	
Pt100	AA	-50~250	0~150	±（0.1+0.0017|t|）
	A	-100~450	-30~300	±（0.15+0.002|t|）
	B	-196~600	-50~500	±（0.3+0.005|t|）
	C	-196~600	-50~600	±（0.6+0.01|t|）
	—	-50~150	—	±（0.3+0.006|t|）

|t|=温度绝对值，单位为℃
t = temperature Absolute value,units for C

接线方式

Wire-connection mode

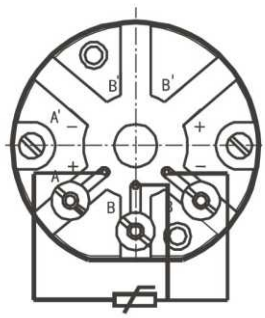

单支接线方法

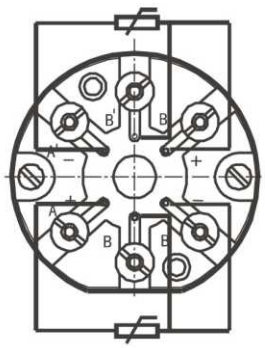

双支接线方法

型号命名方法 Naming method of model

W 温度仪表 Temperature instrument

Z 热电阻 Thermal resistance

感温元件材料 Material for temperature-sensing element

P 铂 platinum
C 铜 copper

偶丝对数

无 单支 Non, single support
2 双支 2 double support

安装固定装置 Installation and fixation mode

1 无固定装置 Non-fixing device
2 固定螺纹 Fixed-sleeve screw thread
3 活动法兰 Active-sleeve screw thread
4 固定法兰 Fixed-sleeve flange
5 活络管接头式 Adjustable pipe joint type
6 固定螺纹锥形式 Fixed thread cone type
7 直形管接头式 Joint type of straight pipe
8 固定螺纹管接头式 Fixed joint type of threaded pipe

接线盒形式 Junction box form

2 防喷式
3 防水式

保护管直径 Diameter of protective tube

0 Φ16
1 Φ12

附加装置形式 Additional device form

G 变截面 Variable cross-section
B 带温度变送器 With temperature transmitter

W	Z	P	$_2$	-	2	3	1	G	典型型号示例 Examples of typical model

无固定装置热电阻 Thermal resistance with no-fixed device

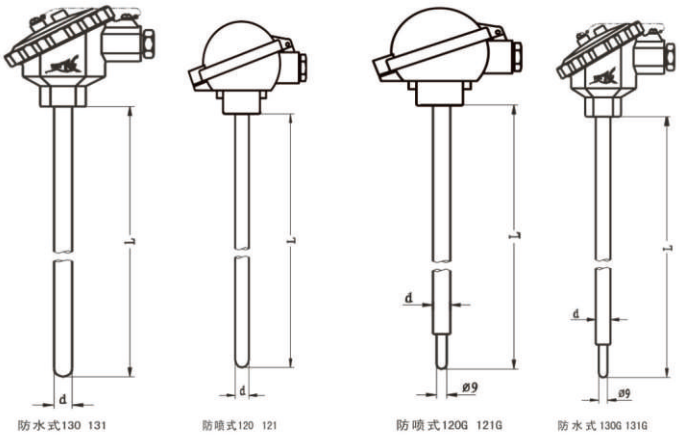

型号 Model	分度号 Graduation	测温范围 ℃ Range of temperature measurement ℃	热响应时间 Thermal response time	规格 Specification	
				d	L
WZP-120 WZP_2-120	Pt100	A级 -30-300 B级 -50-500	＜90s	Φ16	300 350 400 450 500 550 650 900 1150 1650 2150
WZP-120G WZP_2-120G			＜24s		
WZP-121 WZP_2-121			＜90s	Φ12	
WZP- 121G WZP_2-121G			＜24s		
WZP- 130 WZP_2-130			＜90s	Φ16	
WZP- 130G WZP_2-130G			＜24s		
WZP- 131 WZP_2-131			＜90s	Φ12	
WZP- 131G WZP_2-131G			＜24s		
WZC-120G	Cu50 Cu100	-50~100	＜120s	Φ16	
WZC-120			＜40s		
WZC-130			＜120s		
WZC-130G			＜40s		
WZC-121			＜120s	Φ12	
WZC-121G			＜40s		
WZC-131			＜120s		
WZC-131G			＜40s		

1）型号120、121为防喷式，防护等级IP65;型号130、131为防水式，防护等级IP55；
2）保护管材质为1Cr18Ni9Ti,其余材质根据协议订货。

1) Model 120 and 121 are anti-spring type with the protective grade being IP65; Model 130 and 131 are waterproof type with the protective grade grade being IP55.
2) Protective tube material is 1Cr18Ni9Ti and the rest of the material is ordered according to the agreement.

固定螺纹式热电阻 Fixed screw type thermal resistance

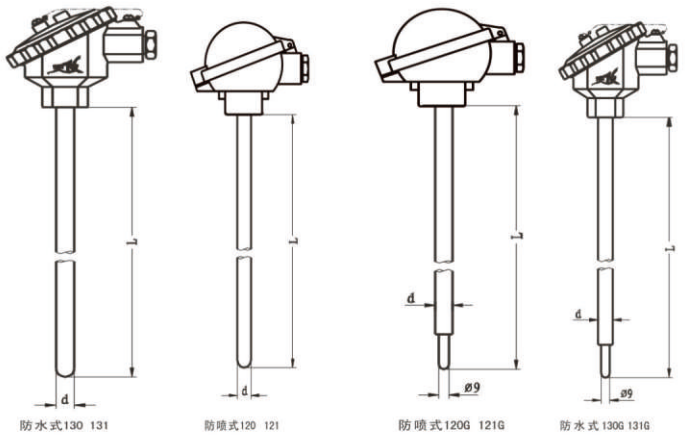

型号 Model	分度号 Graduation	测温范围 ℃ Range of temperature measurement ℃	热响应时间 Thermal response time	规格 Specification	
				d	L
WZP-220 WZP_2-220	Pt100	A级 −30-300 B级 −50-500	＜90s	Φ16	300 350 400 450 500 550 650 900 1150 1650 2150
WZP-220G WZP_2-220G			＜24s		
WZP-221 WZP_2-221			＜90s	Φ12	
WZP- 221G WZP_2-221G			＜24s		
WZP- 230 WZP_2-230			＜90s	Φ16	
WZP- 230G WZP_2-230G			＜24s		
WZP- 231 WZP_2-231			＜90s	Φ12	
WZP- 231G WZP_2-231G			＜24s		
WZC-220	Cu50 Cu100	-50~100	＜120s	Φ16	
WZC-220G			＜40s		
WZC-230			＜120s		
WZC-230G			＜40s		
WZC-221			＜120s	Φ12	
WZC-221G			＜40s		
WZC-231			＜120s		
WZC-231G			＜40s		

1）型号220、221为防喷式，防护等级IP65;型号230、231为防水式，防护等级IP55;
2）保护管材质为1Cr18Ni9Ti,其余材质根据协议订货；
3）公称压力≤4.0MPa。

1) Model 220 and 221 are anti-spraying type with the waterproof grade being IP65. model 230 and 231 are waterproof type with the protective grade being IP55.
2) Protective tube material is 1Cr18Ni9Ti and the rest of the material is ordered according to the agreement.
3) Nominal pressure is ≤4.0MPa.

型号示例 Model examples	螺纹规格 Thread specification		d
	代 号 Code	M	
WZP-220		M27×2	Φ16
WZP-220A	A	G3/4	
WZP-221G		M27×2	Φ12
WZP-221GA	A	G3/4	

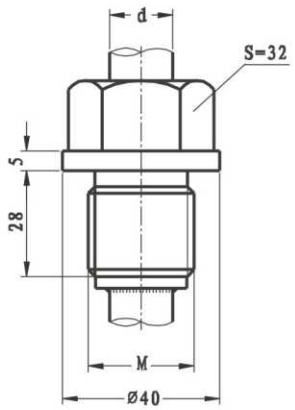

活动法兰式热电阻 Active-flange type thermal resistance

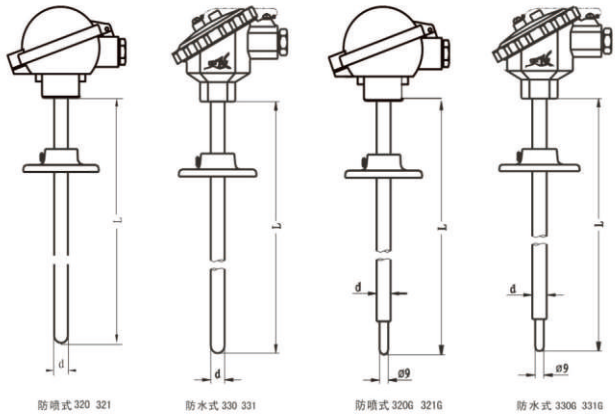

型号 Model	分度号 Graduation	测温范围 ℃ Range of temperature measurement ℃	热响应时间 Thermal response time	规格 Specification	
				d	L
WZP-320 WZP_2-320	Pt100	A级 -30-300 B级 -50-500	＜90s	Φ16	300 350 400 450 500 550 650 900 1150 1650 2150
WZP-320G WZP_2-320G			＜24s		
WZP-321 WZP_2-321			＜90s	Φ12	
WZP- 321G WZP_2-321G			＜24s		
WZP- 330 WZP_2-330			＜90s	Φ16	
WZP- 330G WZP_2-330G			＜24s		
WZP- 331 WZP_2-331			＜90s	Φ12	
WZP- 331G WZP_2-331G			＜24s		
WZC-320	Cu50 Cu100	-50~100	＜120s	Φ16	
WZC-320G			＜40s		
WZC-320			＜120s		
WZC-330G			＜40s		
WZC-321			＜120s	Φ12	
WZC-321G			＜40s		
WZC-331			＜120s		
WZC-331G			＜40s		

1）型号320、321为防喷式，防护等级IP65;型号330、331为防水式，防护等级IP55；
2）保护管材质为1Cr18Ni9Ti,其余材质根据协议订货。

1) Model 320 and 321 are anti-spraying type with the waterproof grade being IP65; model 330 and 331 are waterproof type with the protective grade being IP55.
2) Protective tube material is 1Cr18Ni9Ti and the rest of the material is ordered according to the agreement.

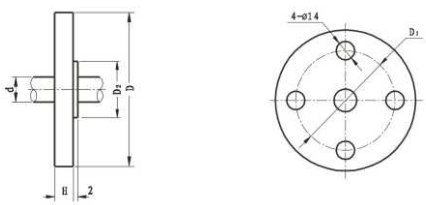

固定法兰式热电阻 Fixed-flange type thermal resistance

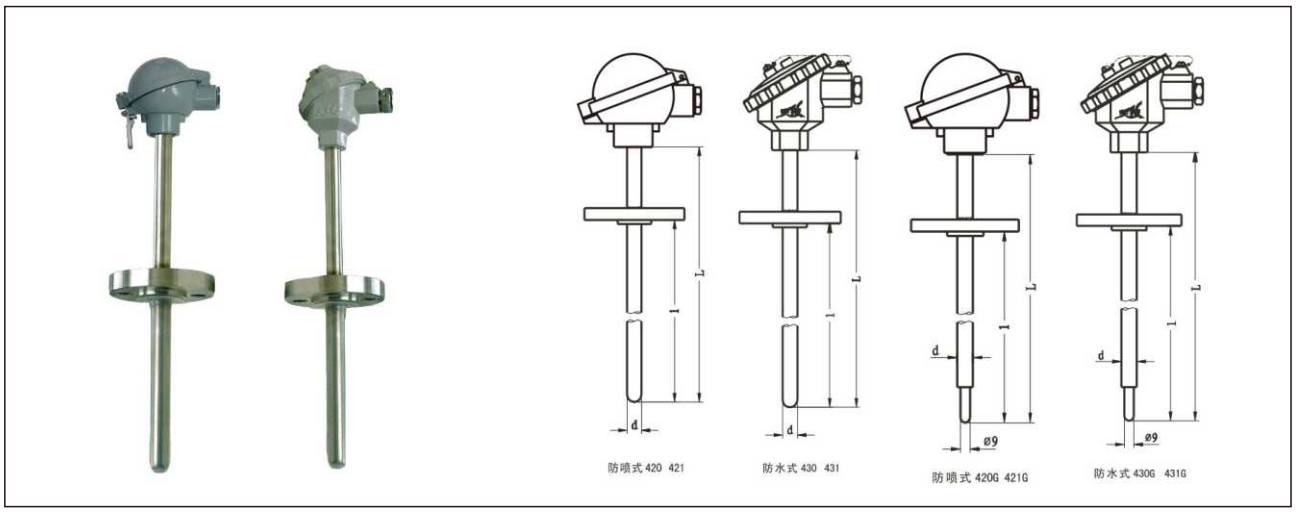

型号 Model	分度号 Graduation	测温范围 ℃ Range of temperature measurement ℃	热响应时间 Thermal response time	规格 Specification	
				d	L
WZP-420 WZP_2-420	Pt100	A级 −30-300 B级 −50-500	＜90s	Φ16	300×150 350×200 400×250 450×300 500×350 550×400 650×500 900×750 1150×1000 1650×1500 2150×2000
WZP-420G WZP_2-420G			＜24s		
WZP-421 WZP_2-421			＜90s	Φ12	
WZP- 421G WZP_2-421G			＜24s		
WZP- 430 WZP_2-430			＜90s	Φ16	
WZP- 430G WZP_2-430G			＜24s		
WZP- 431 WZP_2-431			＜90s	Φ12	
WZP- 431G WZP_2-431G			＜24s		
WZC-420G	Cu50 Cu100	-50~100	＜120s	Φ16	
WZC-420			＜40s		
WZC-430			＜120s		
WZC-430G			＜40s		
WZC-421			＜120s	Φ12	
WZC-421G			＜40s		
WZC-431			＜120s		
WZC-431G			＜40s		

1）型号420、421为防喷式，防护等级IP65;型号430、431为防水式，防护等级IP55；
2）保护管材质为1Cr18Ni9Ti,其余材质根据协议订货；
3）公称压力≤4.0MPa。

1) Model 420 and 421 are anti-spraying type with the waterproof grade being IP65.model 430 and 431 are waterproof type with the protective grade being IP55;
2) Protective tube material is 1Cr18Ni9Ti and the rest of the material is ordered according to the agreement.
3) Nominal pressure is ≤4.0MPa.

型号示例 Examples of model	法兰规格 Flange specification				
	D	D_1	D_2	H	d
WZP-420	Φ95	Φ65	Φ46	14	12、Φ16
WZP-420G	Φ95	Φ65	Φ46		
WZP-421	Φ95	Φ65	Φ46	14	12、Φ16
WZP-421G	Φ95	Φ65	Φ46		

可按用户约定要求提供法兰:详见P86

The flange can be provided according to the requirements of users: for the specific information, please refer to P86.

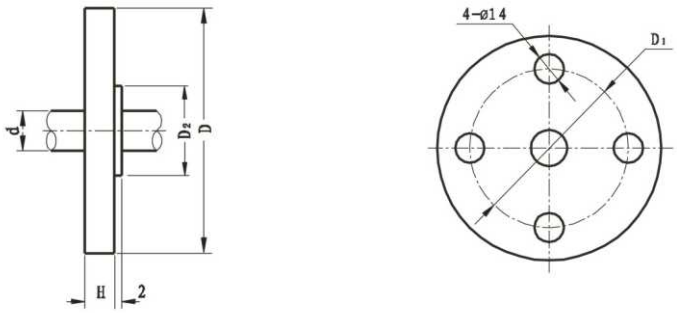

固定螺纹锥形热电阻 Taper heat resistance of fixed-thread type

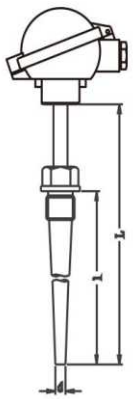

防喷式 620 620A

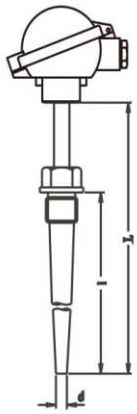

防水式 630 630A

型号 Model	分度号 Graduation	测温范围 ℃ Range of temperature measurement ℃	热响应时间 Thermal response time	规格 Specification	
				d	L
WZP-620 WZP_2-620	Pt100	A级 -30-300 B级 -50-500	＜90s	ϕ15	300×150 350×200 400×250 450×300 500×350 550×400 650×500
WZP-620A WZP_2-620A					
WZP-630 WZP_2-630					
WZP- 630A WZP_2-630A					
WZC- 620 WZC-620A	Cu50 Cu100	-50~100			
WZC- 630 WZC-630A					

1）型号620、621为防喷式，防护等级IP65;型号630、631为防水式，防护等级IP55；
2）保护管材质为1Cr18Ni9Ti,其余材质根据协议订货；
3）公称压力≤15MPa。

1) Model 620 and 621 are anti-spraying type with the waterproof grade being IP65, model 630 and 631 are waterproof type with the protective grade being IP55.
2) Protective tube material is 1Cr18Ni9Ti and the rest of the material is ordered according to the agreement.
3) Nominal pressure is ≤15MPa.

型号示例 Model examples	螺纹规格 Thread specification	
	代 号 Code	M
WZP-620	-	M33×2
WZP-620A	A	NPT1
WZP-630	-	M33×2
WZP-630A	A	NPT1

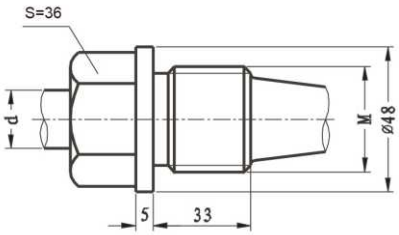

活络管接头式热电阻 Joint type thermal resistance of adjustable pipe

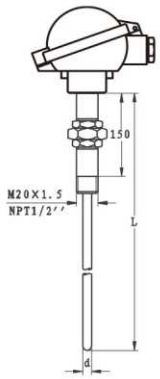

防喷式 52 52A

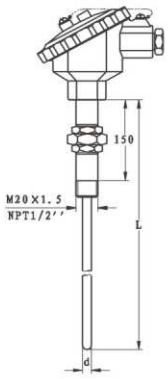

防水式 53 53A

型号 Model	分度号 Graduation	测温范围 ℃ Range of temperature measurement ℃	热响应时间 Thermal response time	规格 Specification	
				d	L
WZP-52 WZP_2-52	Pt100	A级 −30-300 B级 −50-500	M20×1.5	Φ3 Φ4 Φ5 Φ6 Φ8	250 300 350 400 450 550 650 750 900 1150
WZP-52A WZP_2-52A			NPT1/2		
WZP-53 WZP_2-53			M20×1.5		
WZP- 53A WZP_2-53A			NPT1/2		
WZP- 52A WZP-52A	Cu50 Cu100	-50~100	M20×1.5	Φ5 Φ6 Φ8	
			NPT1/2		
WZP- 53 WZP-53A			M20×1.5		
			NPT1/2		

1）型号53、53A为防水式，防护等级IP55；型号52、52A为防喷式，防护等级IP65；
2）如无特殊之约定，L仅为参考尺寸，热电阻插入深度应为热安装套管U尺寸；
3）热安装套管形式详见P119。

1) Model 53 and 53A are waterproof type with the protective grade being IP55,model 52 and 52A are anti-spraying type with the waterproof grade being IP65.
2)If there is no special agreement, L is only the reference size. The insertion depth of thermocouple should be the size of thermal installation sleeve U.
3)The form of casing for thermal installation is shown in P119.

直形管接头式热电阻 Joint type thermal resistance of straight pipe

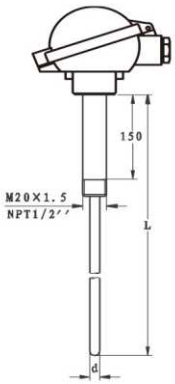

防喷式72 72A

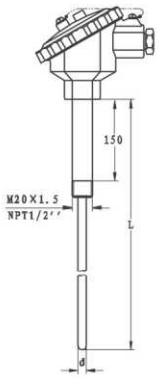

防水式 73 73A

型号 Model	分度号 Graduation	测温范围 ℃ Range of temperature measurement ℃	热响应时间 Thermal response time	规格 Specification	
				d	L
WZP-72 WZP_2-72	Pt100	A级 -30-300 B级 -50-500	M20×1.5	Φ3 Φ4 Φ5 Φ6 Φ8	250 300 350 400 450 550 650 750 900 1150
WZP-72A WZP_2-72A			NPT1/2		
WZP-73 WZP_2-73			M20×1.5		
WZP- 73A WZP_2-73A			NPT1/2		
WZP- 72A WZP-72A	Cu50 Cu100	-50~100	M20×1.5	Φ5 Φ6 Φ8	
			NPT1/2		
WZP- 73 WZP-73A			M20×1.5		
			NPT1/2		

1）型号73、73A为防水式，防护等级IP55；型号72、72A为防喷式，防护等级IP65；
2）如无特殊之约定，L仅为参考尺寸，热电阻插入深度应为热安装套管U尺寸；
3）热安装套管形式详见P119。

1) Model 73 and 73A are waterproof type with the protective grade being IP55, model 72 and 72A are anti-spraying type with the waterproof grade being IP65.
2) If there is no special agreement, L is only the reference size. The insertion depth of thermocouple should be the size of thermal installation sleeve U.
3) The form of casing for thermal installation is shown in P119.

固定螺纹管接头式热电阻 Joint type thermal resistance of fixed screw pipe

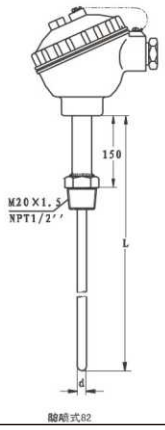

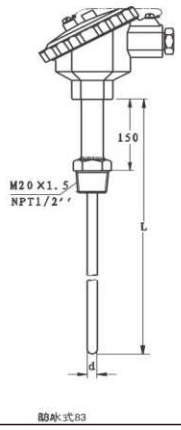

型号 Model	分度号 Graduation	测温范围 ℃ Range of temperature measurement ℃	热响应时间 Thermal response time	规格 Specification	
				d	L
WZP-82 WZP_2-82	Pt100	A级 -30-300 B级 -50-500	M20×1.5	Φ3 Φ4 Φ5 Φ6 Φ8	250 300 350 400 450 550 650 750 900 1150
WZP-82A WZP_2-82A			NPT1/2		
WZP-83 WZP_2-83			M20×1.5		
WZP- 83A WZP_2-83A			NPT1/2		
WZP- 82A WZP-82A	Cu50 Cu100	-50~100	M20×1.5	Φ5 Φ6 Φ8	
			NPT1/2		
WZP- 83 WZP-83A			M20×1.5		
			NPT1/2		

1）型号83、83A为防水式，防护等级IP55；型号82、82A为防喷式，防护等级IP65；
2）如无特殊之约定，L仅为参考尺寸，热电阻插入深度应为热安装套管U尺寸；
3）热安装套管形式详见P119。

1) Model83 and 83A are waterproof type with the protective grade being IP55, model 82 and 82A are anti-spraying type with the waterproof grade being IP65.
2) If there is no special agreement, L is only the reference size. The insertion depth of thermocouple should be the size of thermal installation sleeve U;
3) The form of casing for thermal installation is shown in P119.

防爆热电阻 Explosion-proof thermal resistance

应用

通常和显示仪表、记录仪表、电子计算机等配套使用。直接测量各种生现场存在碳氢化合物等爆炸物的-200℃~500℃范围内液体、蒸汽和气体介质以及固体表面温度。

Application

It is usually used along with display instruments, recording instruments, electronic computers and so on. It is able to directly measure the temperature of liquid, steam and gas and solid surface within the range of -200℃～500℃.

工作原理

隔爆热电阻是利用物间隙隔爆原理，设计具有足够强度的接线盒等部件,将所有会产生火花、电弧和危险温度的零部件都密封在接线盒腔内，当腔内发生爆炸时，能通过接合面间隙熄火和冷却，使爆炸后的火焰和温度传不到腔外，从而进行隔爆。

Working principle

Explosion-proof thermocouple uses the principle of interval explosion-proof with the junction box and other parts with enough strength where the dangerous parts which will generate spark, electric arc and dangerous temperature are sealed, so when the explosion occurs inside the cavity, the flame of the explosion can be cooled and distinguished in the gap between the joint surface so that the flame and the temperature will not be passed to the cavity. Finally, the explosion-proof is realized.

特点

1.压簧式感温元件，抗振性能好；
2.测量精确度高；
3.毋须补偿导线，节省费用；
4.进口薄膜电阻元件，性能可靠稳定。

Characteristics

1. With temperature-sensing element of pressure spring type, so it has good anti-vibration performance.
2. High measurement accuracy.
3. With no compensation wire, which is cost-saving.
4. Imported thin-film resistor with reliable and stable performance.

主要技术参数

1.产品执行标准：IEC60751，GB/T30121-2013，JB/T8623-1997，GB26789-2011。
2.常温绝缘电阻：防爆热电阻在环境温度为15~35℃,相对湿度不大于80%，试验电压为10~100V（直流）电极与外套管之间的绝缘电阻≥100MΩ。

Main technical parameters

1.Product implementation standard
IEC60751,GB/T30121-2013,JB/T8623-1997,GB26789-2011.
2.Insulation resistance in normal temperature
For thermocouple, the environment temperature is 15~35℃, the relative humidity is not more than 80%, the test voltage is 10~100V(DC), the insulation resistance between electrode and outer sleeve≥100MΩ.

测温范围及允差

Range of temperature measurement and the error tolerance

型　号 Model	分度号 Graduation	测温范围 ℃ Range of temperature measurement ℃	精度等级 Precision grade	允许偏差 Allowable deviation
WZP	Pt100	-200~+500	A级	±(0.15+0.002|t|)
			B级	±(0.30+0.005|t|)
WZC	Cu50、Cu100	-50~+100	--	±(0.30+0.006|t|)

注：t为感温元件实测温度绝对值

Note: t is the absolute value of the measured temperature of the temperature sensing element.

取证一览表

Evidence list

防爆级别 Explosion-proof grade	认证机构 Certification body	防爆证号 Number of explosion-proof
dⅡBT4	GYB97152	NEPSI
dⅡCT5	GYB02476	NEPSI
iaⅡCT6	GYB05364X	NEPSI

注：NEPSI防爆认证系国家级仪器仪表防爆安全监督检验站

Note: NEPSI explosion-proof certification department certified the national instruments and meters.

防爆分组形式 Grouping for explosion-proof

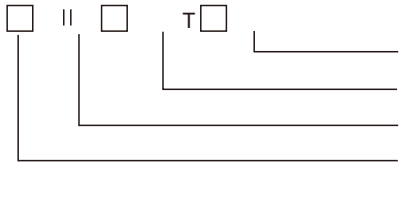

电气设备类别

Ⅰ类——煤矿井下用电气设备
Ⅱ类——工厂用电气设备

Types of electrical equipment

Ⅰ——Electrical equipment for underground coal mine
Ⅱ——Electrical equipment used in factory

防爆等级

防爆热电阻的防爆等级按其使用于爆炸性气体混合物最大试验安全间隙分为A、B、C三级

Explosion-proof grade

Explosion proof grade of explosion-proof thermocouple according to maximum test safety clearance of mixture of explosive gas is divided into A, B, C.

类 别 Types	级 别 Grade	最大试验安全间隙（MESG）mm Maximum test safety clearance（MESG）mm
II	A	0.9≤MESG
	B	B0.5＜MESG＜0.9
	C	CMESG≤0.5

固定螺纹管接头式热电阻 Joint type thermal resistance of fixed screw pipe

防爆热电阻的温度组别按其外露部分允许最高面温度分为T1~T6

Temperature groups of explosion-proof thermocouple is divided into T1~T6 according to maximum surface temperature of the exposed part.

温度组别 Temperature group	允许最高表面温度℃ Maximum surface temperature of the exposed part℃
T1	450
T2	300
T3	200
T4	135
T5	100
T6	85

接线盒形式

Junction box form

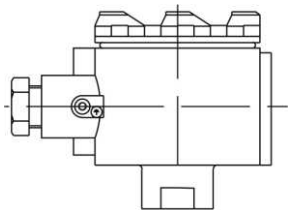

电气设备类别

Types of electrical equipment

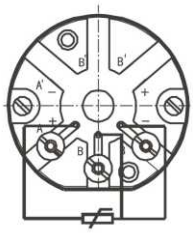

单支接线方式
Single-support connection method

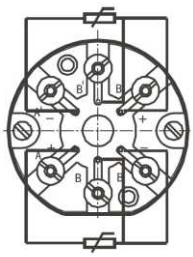

双支接线方式
Double-support connection method

W 温度仪表 Temperature instrument

Z 热电阻 Thermal resistance

感温元件材料 Material for temperature-sensing element

P 铂 platinum
C 铜 copper

偶丝对数 Number of thermal wire couple

无 单支 Non, single support
2 双支 2 double support

安装固定形式 Installation and fixation form

1 无固定装置 Non-fixing device
2 固定螺纹 Fixed-sleeve screw thread
3 活动法兰 Active-sleeve screw thread
4 固定法兰 Fixed-sleeve flange
5 活络管接头式 Adjustable pipe joint type
6 固定螺纹锥形式 Fixed thread cone type
7 直形管接头式 Joint type of straight pipe
8 固定螺纹管接头式 Fixed joint type of threaded pipe

接线盒形式 Junction box form

4 防爆式 explosion proof type

保护管直径 Diameter of protective tube

0 Φ16
1 Φ12

附加装置形式 Additional device form

G 变截面 Variable cross-section
B 带温度变送器 With temperature transmitter

W	Z	P	2	-2	4	1	G	典型型号示例 Examples of typical model

固定螺纹热电阻　Fixed thread thermal resistance

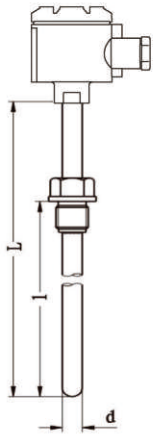

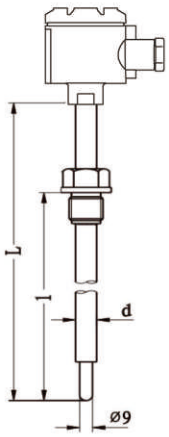

型号 Model	分度号 Graduation	测温范围 ℃ Range of temperature measurement ℃	热响应时间 Thermal res -ponse time	防爆级别 Explosion -proof grade	规格 Specification	
					d	L
WZP-240 WZP_2-240	Pt100	A级 −30-300 B级 −50-500	＜90s	dIIB T4 dIICT5 dIICT6 iaIICT6	Φ16	300×50 350×00 400×50 450×00 500×50 550×00 650×00 600×50 1150×000 1650×500 2150×000
WZP-240G WZP_2-240G			＜24s			
WZP- 241 WZP_2-241			＜45s		Φ12	
WZP- 241G WZP_2-241G			＜24s			
WZP- 240 WZP_2-240G	Cu50 Cu100	-50~100	＜120s		Φ16	
			＜40s			
WZP- 241 WZP_2-241G			＜120s		Φ12	
			＜40s			

1) 热电阻A级按协议订货；
2) 保护管1Cr18Ni9Ti,其余材质根据协议订货；
3）公称压力≤4.0MPa。

1) Thermal resistance A is ordered according to the agreement.
2) Protective tube material is 1Cr18Ni9Ti and the rest of the material is ordered according to the agreement.
3) Nominal pressure is ≤4.0MPa.

号示例 No. of example	螺纹规格 Thread specification	
	代 号 Code	M
WZP- 240	–	M27×2
WZP- 240A	A	G 3/4
WZP- 240C	C	NPT3/4
WZP- 240G	–	M27×2
WZP- 241A	A	G 3/4
WZP- 240C	C	NPT3/4

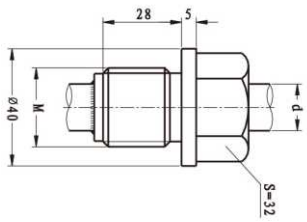

固定法兰式热电阻 Fixed flange-type thermal resistance

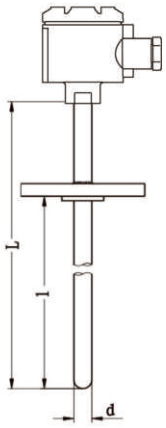

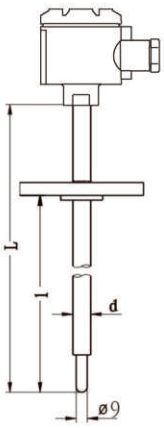

型号 Model	分度号 Graduation	测温范围 ℃ Range of temperature measurement ℃	热响应时间 Thermal res -ponse time	防爆级别 Explosion -proof grade	规格 Specification	
					d	L
WZP-440 WZP_2-440	Pt100	A级 −30-300 B级 −50-500	＜90s	dⅡB T4 dⅡCT5 dⅡCT6 iaⅡCT6	Φ16	300 350 400 450 500 550 650 600 1150 1650
WZP-440G WZP_2-440G			＜24s			
WZP- 441 WZP_2-441			＜45s		Φ12	
WZP-441G WZP_2-441G			＜24s			
WZC- 440	Cu50 Cu100	-50~100	＜120s		Φ16	
			＜40s			
WZC-441			＜120s		Φ12	
			＜40s			

1) 热电阻A级按协议订货；
2) 保护管1Cr18Ni9Ti,其余材质根据协议订货；
3）公称压力≤4.0MPa。

1) Thermal resistance A is ordered according to the agreement.
2) Protective tube material is 1Cr18Ni9Ti and the rest of the material is ordered according to the agreement.
3) Nominal pressure is ≤4.0MPa.

型号示例 Model of example	法兰规格(mm) Flange specification(mm)				
	D	D_1	D_2	H	d
WZP- 240	Φ95	Φ65	Φ46	16	Φ16
WZP- 240A					
WZP- 240C	Φ95	Φ65	Φ46	16	Φ12
WZP- 240G					

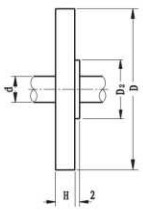

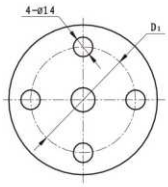

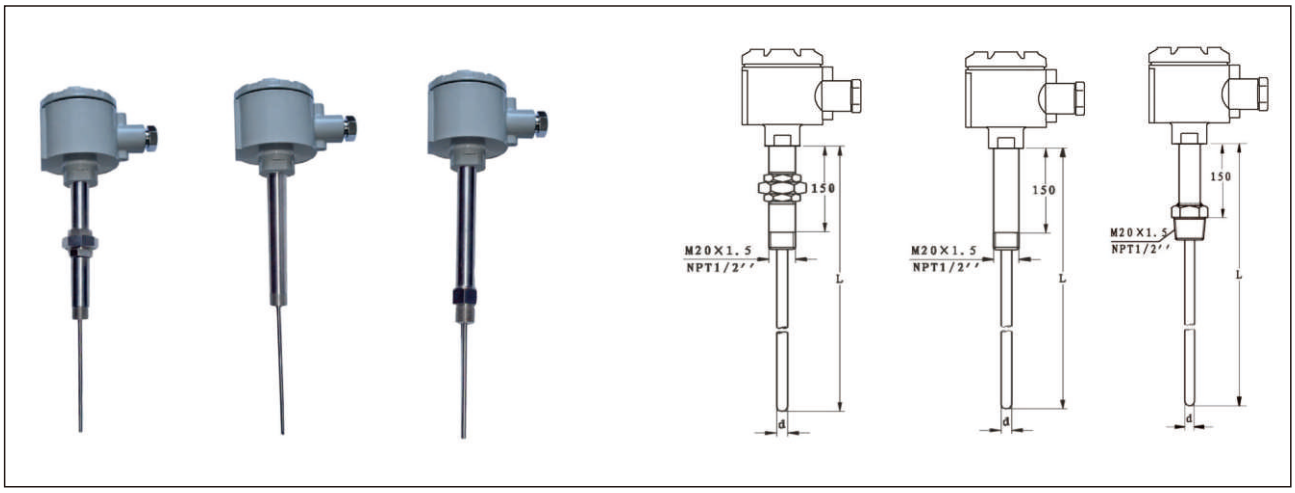

活络管接头式热电阻 Joint type thermal resistance of adjustable pipe

型号 Model	分度号 Graduation	测温范围 ℃ Range of temperature measurement ℃	连接尺寸 Thermal response time	保护管材料 Material for protective tube	规格 Specification	
					d	L
WZP- 54 WZP_2-54	Pt100	A级 −30-300 B级 −50-500	M20×1.5	1Cr18Ni9TiΦ4	Φ4 Φ5 Φ6 Φ8	250 300 350 400 450 550 650 750
WZP- 54A WZP_2-54A			NPT1/2			
WZC- 54	Cu50 Cu100	-50~100	M20×1.5			
WZC-54A			NPT1/2			

直形管接头式热电阻 Joint type thermal resistance of straight pipe

型号 Model	分度号 Graduation	测温范围 ℃ Range of temperature measurement ℃	连接尺寸 Thermal response time	保护管材料 Material for protective tube	规格 Specification	
					d	L
WZP- 74 WZP_2-74	Pt100	A级 −30-300 B级 −50-500	M20×1.5	1Cr18Ni9TiΦ4	Φ4 Φ5 Φ6 Φ8	250 300 350 400 450 550 650 750
WZP- 74A WZP_2-74A			NPT1/2			
WZC- 74	Cu50 Cu100	-50~100	M20×1.5			
WZC-74A			NPT1/2			

固定螺纹管接头式热电阻 Joint type thermal resistance of fixed screw pipe

型号 Model	分度号 Graduation	测温范围 ℃ Range of temperature measurement ℃	连接尺寸 Thermal response time	保护管材料 Material for protective tube	规格 Specification	
					d	L
WZP- 84 WZP_2-84	Pt100	A级 −30-300 B级 −50-500	M20×1.5	1Cr18Ni9TiΦ4	Φ4 Φ5 Φ6 Φ8	250 300 350 400 450 550 650 750
WZP- 84A WZP_2-84A			NPT1/2			
WZC- 84	Cu50 Cu100	-50~100	M20×1.5			
WZC-84A			NPT1/2			

带温度变送器防爆热电偶(阻)

Explosion-proof thermocouple with temperature transmitter (resistance)

应用

通常和显示仪表、记录仪表、电子计算机等配套用,输出4~20mA.直接测量生产现场存在碳氯化合物等爆炸物的－200℃~1300℃范围内液体,蒸汽和气体介质以及固体表面温度。

Application

It is usually used along with display instruments, recording instruments, electronic computers and so on, outputting 4~20mA electricity. It is able to directly measure the temperature of liquid, steam and gas and solid surface within the range of -200℃~1300℃ in the production field where there are explosives. such as carbon and chlorine compounds.

工作原理

防爆热电偶利用间隙隔爆原理，当腔内发生爆炸时，能通过接合面间隙熄火和冷却，使爆炸后的火焰全温度传不到腔外，从而进行防爆。

热电偶(热电阻)产生的热电势(电阻)经过温度变送器的电桥产生不平衡信号，经放大后转换成为4~20mA的直流电信号给工作仪表，工作仪表便显示出所对应的温度值。

Working principle

Explosion-proof thermocouple uses the principle of interval explosion-proof. When the explosion occurs inside the cavity, the flame of the explosion can be cooled and distinguished in the gap between the joint surface so that the flame and the temperature will not be passed to the cavity. Finally, the explosion-proof is realized.

The electric potential produced by thermocouple (thermal resistance) will generate the unbalanced signal through the bridge of temperature transmitter. After being amplified, it will be converted into 4~20mA DC electrical signal and sent to the working instrument which will display the corresponding temperature value.

特点

1.二线制输出4~20mA，抗干扰能力强；
2.节省补偿导线及安装温度变器费用；
3.安全可靠，使用寿命长；
4.冷端温度自动补偿，非线性校正电路。

Characteristics

1.Output 4~20mA by second-tier system with strong anti-interference ability;
2.It saves the costs of compensation wire and the installation of temperature transformer;
3.It is safety and reliable with long service life:
4.Temperature automatic compensation in the cold end with nonlinear correction circuit;

主要技术参数

产品执行标准：IEC584，IEC60751，GB/T26786-2011，JB/T7391-1994。

Main technical parameters

Product implementation standard:IEC584,IEC60751,GB/T26786-2011,JB/T7391-1994.

热电偶 **Thermocouple**

型 号 Model	分度号 Graduation	允差等级 Tolerance level			
		I		II	
		允差值 Tolerance value	测温范围 ℃ Range of temperature measurement ℃	允差值 Tolerance value	测温范围 ℃ Range of temperature measurement ℃
WRN	K	±1.5℃	-40~+375	±2.5℃	-40~+333
		±0.004|t|	375~1000	±0.0075|t|	333~1200
WRM	N	±1.5℃	-40~+375	±2.5℃	-40~+333
		±0.004|t|	375~1000	±0.0075|t|	333~1200
WRE	E	±1.5℃	-40~+375	±2.5℃	-40~+333
		±0.004|t|	375~800	±0.0075|t|	333~900
WRF	J	±1.5℃	-40~+375	±2.5℃	-40~+333
		±0.004|t|	375~750	±0.0075|t|	333~750
WRC	T	±0.5℃	-40~+125	±1.0℃	-40~+133
		±0.004|t|	125~350	±0.0075|t|	133~350

热电阻 **Thermal resistance**

型 号 Model	分度号 Graduation	测温范围 ℃ Range of temperature measurement ℃	精度等级 Precision grade	允许偏差 Allowable deviation
WZPB	Pt100	-200~+500	A级	±(0.15+0.002|t|)
			B级	±(0.30+0.005|t|)
WZCB	Cu50 Cu100	-50~+100	--	±(0.30+0.006|t|)

输出信号 Output signal	4~20mA，负载电阻250Ω；传输导线电阻100Ω。 4~20mA, load resistance 250, res4istance of the transmission conductor is 100Ω.		
输出方法 Output method	二线制 Second-tier system		
精度等级 Precision grade	温度变送器精度等级：0.1，0.2，0.5 显示器精度等级： 模拟指示式2.5级，数字显示式1.0级 Precision level of temperature transmitter : 0.2; 0.1; 0.5 Display precision grade:Analog indicator 2.5 Digital display type 1		
供电电源 Power supply	24V.DC±10%	**防护等级** Protection level	Ip65
防爆等级 Explosion-proof grade	隔爆型:dⅡBT4,dⅡCT5,dⅡCT6 本质安全型:iaⅡCT6 Explosion-proof:dⅡBT4,dⅡCT5,dⅡCT6 Essentially safe type:iaⅡCT6		
绝缘电阻 Insulation resistance	仪表输出接线端子与外壳之间的绝缘电阻应不小于50MΩ Thermal response timeThe insulation resistance between the instrument output terminal and the enclosure shall be not less than 50M;		
热响应时间 Thermal response time	温度出现阶跃变化时，仪表的电流输出信号变化至相当于该阶跃变化的50%所需的时间，通常以τ0.5表示当温度变送器的阶跃响应稳定时间不超过热电偶(阻)热响应稳定时间τ0.5的五分之一时，则用热电偶(阻)热响应时间作为仪表的热响应时间。 当温度变送器的阶跃响应稳定时间不超过热电偶(阻)热响应稳定时间τ0.5二分之一时，则用温度变送器热响应时间作为仪表的热响应时间。 When the change of phase step appears, the current output signal of the meter changes to the time which is equivalent to 50% of the step change. Generally,τ0.5 is used to show that the stability time of phase step of the temperature transmitter is not more than one fifth of the stability time of thermal response τ0.5, the thermal response time of a thermocouple (resistance) is used as the thermal response time of the instrument. When the stability time of phase step of the temperature transmitter is not more than half of the stability time of thermal response τ0.5, the thermal response time of temperature transmitter is used as the thermal response time of the instrument.		
基本误差 Basic error	仪表的基本误差应不超过热电偶(阻)和温度变送器基本误差的合成误差。 The basic error of the instrument should not exceed the synthetic error of the basicerror of thermocouple (resistance) and temperature transmitter.		

工作环境 Working environment

安装场所等级 Level of installation site	温 度 ℃ Temperature ℃	相对湿度 % Relative humidity %	大气压力 kPa Atmospheric pressure kPa
Cx1	-25~+55	5~95	86~106
Cx2	-25~+70		
Cx3	-40~+80		

支撑管长确定

温度变送器的工作温度由支撑管所造成的壳体升温同环境温度之和。支撑管所造成的壳体升温见下图:

To determine the length of support

The working temperature of the temperature transmitter is the sum of the shell temperature of supporting tube and the temperature of the environment. The shell temperature caused by the supporting tube is shown in the following figure:

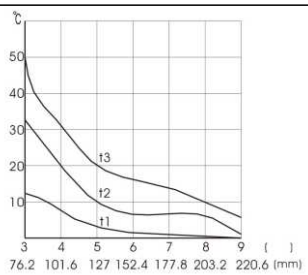

注：t1=260℃ t2=540℃ t3=850℃

Note：t1=260℃ t2=540℃ t3=850℃

取证一览表 Evidence list

防爆级别 Explosion-proof grade	防爆证号 Number of explosion-proof	认证机构 Certification body
dIIBT4	GYB97151	NEPSI
dIIBT4	GYB97152	NEPSI
dIICT5	GYB02475	NEPSI
dIICT5	DYB02476	NEPSI
iaIICT6	GYB05363X	NEPSI
iaIICT6	GYB05364X	NEPSI

注：NEPSI防爆认证系国家级仪器仪表防爆安全监督检验站

Note: NEPSI explosion-proof certification department certified the national instruments and meters.

型号命名方法 Naming method of model

W 温度仪表 Temperature instrument

类别 Category

R 热电偶 Thermocouple
Z 热电阻 Thermal resistance

感温元件材料 Material for temperature-sensing element

M 镍铬硅-镍硅 Nichrome-nickel silicon
N 镍铬-镍硅 Nickel chromium-nickel silicon
E 镍铬-铜镍 Nickel chromium-copper nicke
F 铁—铜镍 Iron-copper nickel
C 铜-铜镍 Copper-copper nickel
P 铂 platinum
C 铜 copper

B 温度变送器 Temperature transmitter

J 机电一体化 Mechanotronics

偶丝对数 Number of thermal wire couple

无 单支 Non, single support
2 双支 2 double support

安装固定装置 Installation and fixation mode

2 固定螺纹 Fixed crew thread
3 活动法兰 Active flange
4 固定法兰 Fixed flange
5 活络管接头式 Adjustable pipe joint type
6 固定螺纹锥形式 Fixed thread cone type
7 直形管接头式 Joint type of straight pipe

接线盒形式 Junction box form

4 防爆式 Explosion-proof type

保护管直径 Diameter of protective tube

0 Φ16
1 Φ12

显示形式 Display form

M 模拟显示 Simulation show
S 数字显示 Digital show

附加安装形式 Additional form

无 正常安装 Normal installation
Z 分离安装 Separation installation

W	R	N	B	J	2	-	2	4	1	S	Z	典型型号示例 Examples of typical model

固定螺纹式 Fixed screw thread

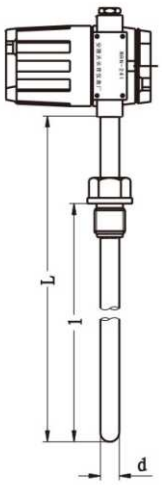

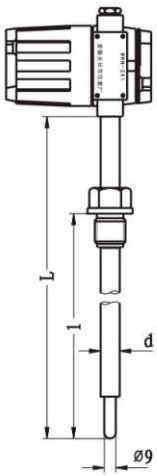

型号 Model	分度号 Graduation	测温范围 ℃ Range of temperature measurement ℃	热响应时间 Thermal res -ponse time	防爆级别 Explosion -proof grade	规格 Specification	
					d	L
WRMB-240M	N	0~1300	＜90s	dIIBT4 dIICT5 dIICT6 iaIICT6	Φ16	300 350 400 450 500 550 650 900 1150 1650 2150
WRMB-240S						
WRMB-240GM WRMB-240GS			＜24s			
WRNB-240M WRNB-240S	K	0~1300	＜90s			
WZCB-241GM WZCB-241GS			＜24s			
WRNB-240GM WRNB-240GS	E	0~800	＜90s			
WREB-240M WREB-240S			＜24s			
WREB-240GM WREB-240GS	T	0~350	＜90s			
WRCB-240M WRCB-240S			＜24s			
WRCB-240GM WRCB-240GS	J	0~600	＜90s			
WRFB-240M WRFB-240S			＜24s			
WZPB-241M WZPB-241S	Pt100	A级 −30-300 B级 −50-500	＜120s		Φ12	
WZPB-241GM WZPB-241GS			＜24s			
WZCB-241M WZCB-241S	Cu50 Cu100	-50~100	＜120s			
WZCB-241GM WZCB-241GS			＜24s			

1)热电偶Ⅰ级、热电阻A级按协议订货；
2)保护管材质为1Cr18Ni9Ti，其余材质根据协议订货；
3)公称压力≤4.0MPa。

1) Thermocouple I and thermal resistance A are ordered according to the agreement.
2) Protective tube material is 1Cr18Ni9Ti and the rest of the material is ordered according to the agreement.
3) Nominal pressure is ≤4.0MPa.

号示例 No. of example	螺纹规格 Thread specification		d
	代 号 Code	M	
WZP- 240	-	M27×2	Φ16
WZP- 240A	A	G3/4	
WZP- 240G	-	M27×2	
WZP- 241A	A	G3/4	

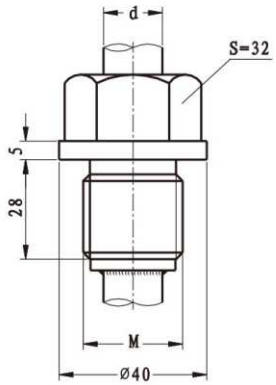

数显表头（代号S）

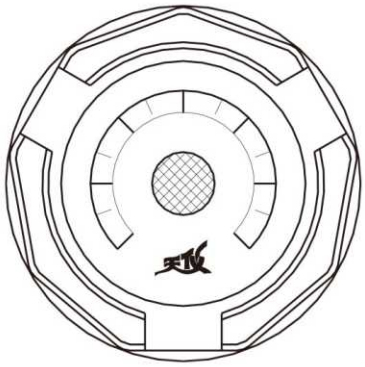

模拟表头（代号M）

固定法兰式 Fixed flange type

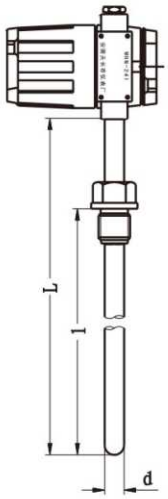

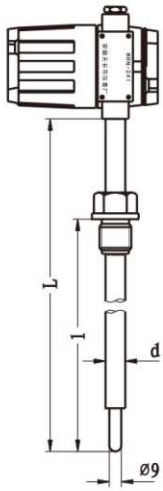

型号 Model	分度号 Graduation	测温范围 ℃ Range of temperature measurement ℃	热响应时间 Thermal res -ponse time	隔爆等级 Explosion -proof grade	规格 Specification	
					d	L
WRMB-440M	N	0~1300	＜90s	dIIBT4 dIICT5 dIICT6 iaIICT6	Φ16	300 350 400 450 500 550 650 900 1150 1650 2150
WRMB-440S						
WRMB-440GM WRMB-440GS			＜24s			
WRNB-440M WRNB-440S	K	0~1300	＜90s			
WZCB-440GM WZCB-440GS			＜24s			
WRNB-440M WRNB-440S	E	0~800	＜90s			
WREB-440GM WREB-240GS			＜24s			
WRCB-440M WRCB-440S	T	0~350	＜90s			
WRCB-440GM WRCB-440GS			＜24s			
WRCB-440M WRCB-440S	J	0~600	＜90s			
WRFB-440GM WRFB-440GS			＜24s			
WZPB-441M WZPB-441S	Pt100	A级 −30-300 B级 −50-500	＜120s		Φ12	
WZPB-441GM WZPB-441GS			＜24s			
WZCB-441M WZCB-441S	Cu50 Cu100	-50~100	＜120s			
WZCB-441GM WZCB-441GS			＜24s			

1)热电偶Ⅰ级、热电阻A级按协议订货；
2)保护管材质为1Cr18Ni9Ti，其余材质根据协议订货；
3)公称压力≤4.0MPa。

1) Thermocouple I and thermal resistance A are ordered according to the agreement.
2) Protective tube material is 1Cr18Ni9Ti and the rest of the material is ordered according to the agreement.
3) Nominal pressure is ≤4.0MPa.

型号示例 No. of example	法兰规格(mm) Flange specification(mm)				
	D	D_1	D_2	H	d
WRN-440S	Φ95	Φ65	Φ46	16	Φ16
WRN-430GS					
WRN-431S	Φ95	Φ65	Φ46	16	Φ12
WRN-431GS					

可按用户约定要求提供法兰：详见P86

The flange can be provided according to the requirements of users: for the specific information, please refer to P86.

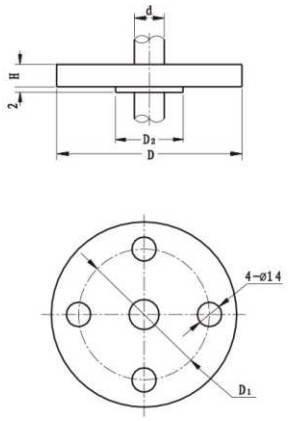

直形管接头式　Joint type of straight pipe

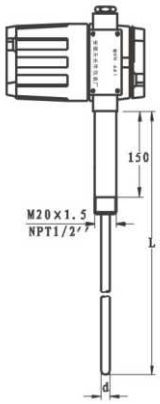

型　号 Model	分度号 Graduation	测温范围 ℃ Range of temperature measurement ℃	连接尺寸 Thermal response time	隔爆等级 Explosion-proof	规格 Specification	
					d	L
WRMB-74M WRMB-74S	N	0~1300	M20×1.5	dIIBT4 dIICT5 dIICT6 iaIICT6	Φ4 Φ5 Φ6 Φ8	250 275 300 350 400 450 550 650 750
WRMB-74AM WRMB-74AS			NPT1/2			
WRNB-74M WRNB-74S	K	0~1300	M20×1.5			
WRNB-74AM WRNB-74AS			NPT1/2			
WREB-74M WREB-74S	E	0~800	M20×1.5			
WREB-74AM WREB-74AS			NPT1/2			
WRCB-74M WRCB-74S	T	0~350	M20×1.5			
WRCB-74AM WRCB-74AS			NPT1/2			
WRFB-74M WRFB-74S	J	0~600	M20×1.5			
WRFB-74AM WRFB-74AS			NPT1/2			
WZPB-74M WZPB-74S	Pt100	A级　-30-300 B级　-50-500	M20×1.5		Φ5 Φ6 Φ8	
WZPB-74AM WZPB-74AS			NPT1/2			
WZCB-74M WZCB-74S	Cu50 Cu100	-50~100	M20×1.5			
WZCB-74AM WZCB-74AS			NPT1/2			

1）热电阻A级按协议订货；
2）如无特殊之约定，L仅为参考尺寸，热电偶插入深度应为热安装套管U尺寸；
3）热安装套管形式详见P119。

1) Thermal resistance A is ordered according to the agreement.
2)If there is no special agreement, L is only the reference size. The insertion depth of thermocouple should be the size of thermal installation sleeve U.
3)The form of casing for thermal installation is shown in P119.

SBW系列温度变送器 Temperature transmitter of SBW series

概述

SBW系列热电偶、热电阻温度变送器是DDZ系列仪表中的现场安装式温度变送器单元，与工业热电偶、热电阻配套使用，它采用二线制传输方式（两根导线作为电源输入和信号输出的公用传输线）。将工业热电偶、热电阻信号转换成与输入信号或与温度信号成线性的4−20mA、0−10 mA、的输出信号。

该变送器可直接安装在热电偶、热电阻的接线盒内与之形成一体化结构。它作为新一代测温仪表可广泛应用于冶金、石油、化工、电力、轻工、纺织、食品、国防以及科研等工业部门。

Summary

Thermocouple, thermal resistance and temperature transmitter of SBW series are the temperature transmitter units of on-site installation type in DDZ series instruments and they are used by matching with industrial thermocouple, thermal resistance. It uses dual-wire transmission mode(two conducting wires are used as the common transmission lines for power input and signal output). It transforms the industrial thermocouple, thermal resistance signal into 4-20mA and 0-10 mA output signals which are linear with input signal and temperature signal.

The transmitter can be directly installed in the junction box of the thermocouple and thermal resistance so as to form an integrated structure. As the temperature measuring instruments of new generation, it is widely used in metallurgy, petroleum, chemical industry, electric power, light industry, textile, food, national defense, scientific research and other industrial sectors.

工作原理

热电偶或热电阻传感器反被测温度转换成电信号，再将该信号送入变送器的输入网络，该网络包含调零和热电偶补偿等相关电路。经调零后的信号输入到运算放大器进行信号放大，放大的信号一路经V/I转换器算处理后以4～20mA直流电流输出；另一路经A/D转换器处理后到表头显示。变送器的线性化电路有两种，均采用反馈方式。对热电阻传感器，用正反馈方式校正，对热电偶传感器，用多段折线逼近法进行校正。一体化数字显示温度变送器有两种显示方式。LCD显示的温度变送器用两线制方式输出，LED显示的温度变送器用三线制方式输出。

Working principle

Thermocouple or thermal resistance sensor will be converted into electrical signal by the temperature and then, the signal is sent to the input network of the transmitter which is consisted of zero adjustment circuit, a thermocouple compensation circuit and other related circuits. The signal after zero adjustment will be input to the operational amplifier for signal amplification. The signal after amplification will be output as 4 ~ 20mA DC after being processed by the V/I converter in one way; in another way, it will be displayed in gauge outfit after being processed by A/D converter. There are two kinds of linear circuit in the transmitter, both of which adopt the feedback mode. The thermal resistance sensor is corrected by the positive feedback mode while the thermocouple sensor is corrected by approximation method of multiple-segment line. There are two kinds of display modes for the temperature transmitter of integrated digital display. The temperature transmitter displayed by LCD is output by the two-wire system while the temperature transmitter displayed by LED is output by the three-wire system.

主要特点

1. 采用硅橡胶或环氧树脂密封结构，因此耐震、耐湿、适合在恶劣的现场境中安装使用；
2. 现场安装在热电偶、热电阻的接线盒内使用，直接输出4～20mA、0～10 mA、的输出信号。这样既节约了昂贵的补偿导线费用，又提高了信号远距离传输过程中的抗干扰能力；
3. 热电偶变送器具有冷端温度自动补偿功能；
4. 精度高、功耗低，使用环境温度范围宽，工作稳定可靠；
5. 适用范围广、既可以与热电偶、热电阻形成一体化现场安装结构，也可以作为功能模块安装在检测设备中和仪表盘上使用；
6. 智能型温度变送器可通过HART调制解调器与上位机通讯或与手持器和PC机对变送器的型号、分度号、量程进行远程信息管理、组态、变量监测、校准和维护等功能；
7. 智能型温度变送器可按用户实际需要调整变送器的显示方向，并可显示变送器所测的介质温度、传感器值的变化、输出电流和百分比例；

Main features

1. The silicone rubber or the sealing structure of epoxy resin are adopted, therefore, the property of resistance to vibration and moisture can be guaranteed and it is suitable to be installed and used in fierce environment;
2. It is installed in the junction box of thermocouple, thermal resistance with the output signal being 4～20mA 0～10 mA, which not only saves the cost of expensive compensation wire, but also improves the anti-interference ability of the signal in the long-distance transmission.
3. Thermocouple transmitter is endowed with temperature automatic compensation function in the cold terminal;
4. With high precision, low power consumption, wide scope of environment temperature, stable and reliable working state;
5. The application scope is wide, which can not only form an integrated on-site installation structure with thermocouple and thermal resistance, but also be used as a function module to be installed on the test equipment and the instrument panel;
6. Intelligent temperature transmitter can carry out remote information management, configuration, variable monitoring, calibration, maintenance and other functions for the model, graduation and the range of transmitters by adopting HART modem, PC communication or handheld device and PC;
7. Intelligent temperature transmitter can adjust the display direction of the transmitter according to the actual needs of the user. What is more, it can also display the temperature of the medium, the value change of the sensor, the output current and the percentage of the transmitter;

技术参数

1、输入

热电偶：K、E、J、B、S、T、N（两线制），电压：-70mV -70mV，-,125mV-1100mV；连接电缆：传感器引线最大阻抗1.5kΩ热电阻：Pt10、Pt50、Pt100、Pt200、Pt500、Pt1000（三线制、四线制），电阻测量：0-350Ω、0-500 0Ω；连接电缆：阻值补偿可达到50Ω。

2、输出

隔离电压0.5kv改为2.5kv

3、变送器输入选项、精度和环境温度影响。

Technical parameter

1. input

Thermocouple: (two wire system), voltage: connect cable: sensor lead, maximum impedance 1.5k

Thermal resistance: (three wire system, four wire system), resistance measurement: connect cable: resistance compensation can reach 50.

2.output

Isolated voltage 0.5kV instead of 2.5KV

3.Transmitter input options, accuracy and environmental temperature impact.

传感器 Sensor	变送器输入范围 Transmitter input range		精 度 Accuracy		环境温度每变化1.0℃（1.08℃）对精度的影响 (1) The influence of ambient temperature varied from 1 DEG C (1.08 C) on accuracy (1)	
	℃	℉	固定值 Fixed value	量程百分比 Percent Range	固定值 Fixed value	量程百分比 Percent Range
2、3、4线电阻式温度检测器 2、3、4wire resistance type temperature detector						
Pt100(2) (a=0.00385)	-200至850	-328至1562	0.2℃（0.36℉）	±0.10	0.006℃（0.011℉）	±0.004
Pt100(3) (a=0.003916)	-200至645	-328至1193	0.2℃（0.36℉）	±0.10	0.006℃（0.011℉）	±0.004
Pt200(2)	-200至850	-328至1193	1.17℃（2.11℉）	±0.10	0.018℃（0.032℉）	±0.004
Pt500(2)	-200至850	-328至1562	0.47℃（0.85℉）	±0.10	0.018℃（0.032℉）	±0.004
Pt1000(2)	-200至300	-328至1562	0.23℃（0.41℉）	±0.10	0.010℃（0.018℉）	±0.004
Ni120(4)	-70至300	-94至572	0.16℃（0.29℉）	±0.10	0.004℃（0.007℉）	±0.004
Cu10(5)	-50至250	-58至482	2℃（3.60℉）	±0.10	0.06℃（0.108℉）	±0.004
热电偶(6)						
B型(7)	100至1820	212至330	1.5℃（2.70℉）	±0.10	0.056℃（0.101℉）	±0.004
E型(7)	-50至1000	-58至1832	0.4℃（0.72℉）	±0.10	0.016℃（0.029℉）	±0.004
J型(7)	-180至760	-292至1400	0.5℃（0.90℉）	±0.10	0.016℃（0.029℉）	±0.004
K型(7)	-180至1372	-292至2502	0.5℃（0.90℉）	±0.10	0.02℃（0.036℉）	±0.004
N型(7)	-200至1300	-328至2372	0.8℃（1.44℉）	±0.10	0.02℃（0.036℉）	±0.004
R型(7)	0至1768	32至3214	1.2℃（2.16℉）	±0.10	0.06℃（0.108℉）	±0.004
S型(7)	0至1768	32至3214	1℃（1.80℉）	±0.10	0.06℃（0.108℉）	±0.004
T型(7)	-200至400	-328至752	0.5℃（0.90℉）	±0.10	0.02℃（0.036℉）	±0.004
T型(7)	-200至400	-328至752	0.5℃（0.90℉）	±0.10	0.02℃（0.036℉）	±0.004
T型(7)	-200至400	-328至752	0.5℃（0.90℉）	±0.10	0.02℃（0.036℉）	±0.004
毫伏表输入	-10至100mv	0.03mV		±0.10	0.001mV	±0.004
2、3、4线欧姆表输入	0至2000欧姆	0.7欧姆		±0.10	0.028欧姆	±0.004

4、显示方式：四位LCD显示现场温度。

5、电源：变送器运行时，变送器端子电压达到12.0至42.4V DC,负载电阻在250和1000欧姆之间。需要的最小电源17.75 VDC，负载为250欧姆。变送器电源端子额定电压为42.4VDC。

4、 display mode: four bit LCD display field temperature.

5: power supply: transmitter operation, the transmitter terminal voltage of 12 to 42.4VDC, load resistance between 250 and 1000 ohms. The minimum power required is 17.75VDC and the load is 250 ohms. The rated voltage of the transmitter terminal is 42.4VDC.

6、稳定性

对于电阻式温度检测器和热电偶输入，12个月内变送器稳定性将达到：±0.1%读数或0.1℃。

6. stability

For the resistance type temperature detector and thermocouple input, the transmitter stability will reach to + 0.1% readings or 0.1 DEG C within 12 months.

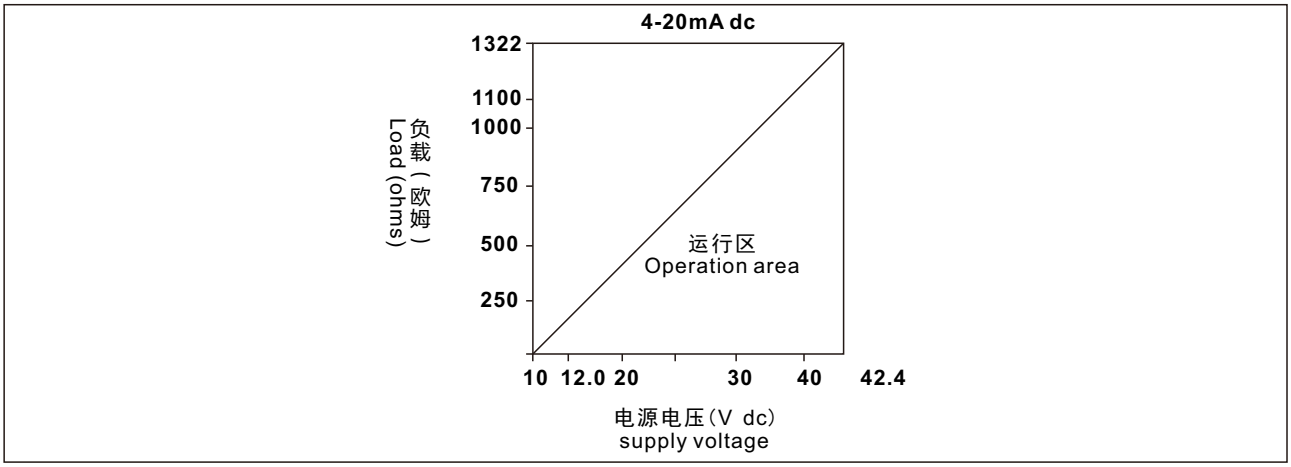

型号代码及说明

Model code and description

型号 Model code						说明 Description
SBW						温度变送器 Temperature transmitter
类别 Category	R					热电偶 Thermocouple
	Z					热电阻 Thermal resistance
传感器 Sensor		1				适配K热电偶/适配Pt100热电阻 Sensor K thermocouple is suitable / Pt100 thermal resistance is suitable
		2				适配E热电偶/适配Cu100热电 E thermocouple is suitable/Cu100 thermoelectric is suitable
		3				适配J热电偶/适配Cu50热电阻 J thermocouple is suitable/ Cu50 thermal resistance is suitable
		4				适配B热电偶 B thermocouple is suitable
		5				适配S热电偶 S thermocouple is suitable
		6				适配T热电偶 T thermocouple is suitable
		7				适配N热电偶 N thermocouple is suitable
		9				用户自定 Customized
电路类别 Circuit category			0			隔离型 Isolated type
			1			非隔离型 Non-isolated type
安装方式 Installation method				0		常规型 Installation methodConventional type
				1		专用型 Special type
				2		挂壁型 Wall hanging type
				3		导轨型 Guide rail type

型号 Model code		说明 Description
变送器级别 Transmitter levelR	0	常规型 Transmitter level Conventional type
	1	智能型 Intelligent type
	2	数显型 Digital display type
	3	指针型 Pointer type
	4	智能数显型 Intelligent digital display type
	5	智能指针型 Intelligent pointer type
	6	带HART协议型 With HART protocol
	7	用户指定型 Customer-specified type

注:仪表接线端子详细情况见随机的说明书及仪表后接线图

Note: The details of the instrument terminals are shown in random guidance book and the wiring diagram of the instrument.

接线说明 wiring instructions

1号端子：DC24V+
Terminal 1: DC24V+

2号端子：DC24V-
Terminal 2: DC24V-

热电偶接线：
Thermocouple wiring:

4号端子：热电偶正端
Terminal 4: thermocouple terminal

5号端子：热电偶负端
Terminal 5: negative end of thermocouple

热电阻接线：
Thermal resistance connection:

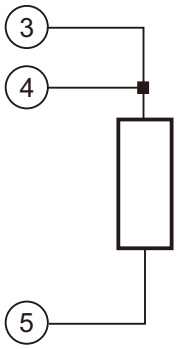

电站热电偶（阻） Temperature transmitter of SBW series

应用

专业针对电站设计,可以满足30万、60万、100万千瓦等发电机组及辅机测温需要。直接测量生产过程中的－200℃~800℃范围内液体、蒸汽和气体介质以及因体表面测温。

Application

It is designed professionally for power plant and it can meet the requirements for generator set of 0.3 million, 0.6 million and 1 million KW and auxiliary temperature measurement. It can directly measure the liquid, vapor and gas media in the production process and temperature on the surface of the gas in the range of 200 ~800℃.

主要技术参数

产品执行标准
IEC584
IEC60751
GB/T16839−1997
GB/T30121−2013
JB/T8623−1997
GB/T30429−2013

Main technical parameters

Product implementation standard
IEC584
IEC60751
GB/T16839-1997
GB/T30121-2013
JB/T8623-1997
GB/T30429-2013

工作原理

热电偶的电极由两根不同导体材质组成,当测量端与参比端存在温差对,就会产生热电势,工作仪表便示出热电势所对应的温度值。

电阻是利用物质在温度变化时,其电阻也随着发生变化的特征来测量温度的,当阻值变化时,工作仪表便显示出阻值所对应的温度值。

Working principle

The electrodes of the thermocouple are composed of two conductors of different materials. When the temperature difference between the measuring end and the reference end exists, the thermal electric potential can be generated, the working instrument shows the corresponding temperature value of the thermal electric potential.

The temperature measurement is realized by the resistance with the characteristic that the resistance will change along with the temperature. When the resistance changes, the instrument will display relevant temperature corresponding to that resistance.

Range of temperature measurement and error tolerance

测温范围及允差

热电偶

Range of temperature measurement and error tolerance

Thermocouple

型号 Model	分度号 Graduation	允差等级 Error-tolerance level			
		I		II	
		允差值 Error-tolerance value	测温范围 ℃ Range of temperature measurement ℃	允差值 Error-tolerance value	测温范围 ℃ Range of temperature measurement ℃
WRN	K	±1.5℃	−40~+375	±2.5℃	−40~+333
		±0.004|t|	375~1000	±0.0075|t|	333~1200
WRE	E	±1.5℃	−40~+375	±2.5℃	−40~+333
		±0.004|t|	375~800	±0.0075|t|	333~900

热电阻 Thermal resistance

型号 Model	分度号 Graduation	测温范围 ℃ Range of temperature measurement ℃	等 级 Level	允差值 Error-tolerance value
WZP	Pt100	-200~+500	A级 B级	±（0.15+0.002ltl） ±（0.30+0.005ltl）
WZC	Cu50 Cu100	-50~+100	--	±（0.30+0.006ltl）

注：t为感温元件实测温度绝对值

Note: t is the absolute value of the measured temperature of the temperature-sensing element.

常温绝缘电阻

热电偶的电极由两根不同导体材质组成,当测量端与参比端存在温差对,就会产生热电势,工作仪表便示出热电势所对应的温度值。

热电阻是利用物质在温度变化时,其电阻也随着发生变化的特征来测量温度的,当阻值变化时,工作仪表便显示出阻值所对应的温度值。

The insulation resistance of normal temperature

The electrodes of the thermocouple are composed of two conductors of different materials. When the temperature difference between the measuring end and the reference end exists, the thermal electric potential can be generated, the working instrument shows the corresponding temperature value of the thermal electric potential.

The temperature measurement is realized by the resistance with the characteristic that the resistance will change along with the temperature. When the resistance changes, the instrument will display relevant temperature corresponding to that resistance.

Range of temperature measurement and error tolerance

热套热电偶（阻） Thermal sheathed thermocouple (resistance)

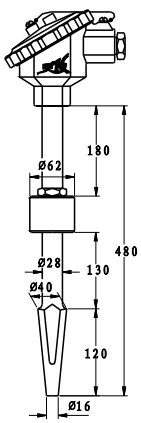

型号01T

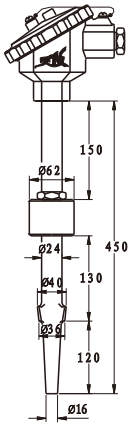

型号624 625

应用

适合于蒸汽管道、锅炉及其他对温度、压力、流速有所要求的场合。

Application

It is suitable for steam pipe, boiler and other occasions which have certain requirements for temperature, pressure and flow rate.

主要技术参数

电气出口:M20×1.5,NPT1/2
连接尺寸:M20×1.5,NPT1/2
防护等级:IP65

Main technical parameters

Electrical outlet:M20×1.5,NPT1/2
Connection dimension:M20×1.5,NPT1/2
Protection level:IP65

型号及规格

Model and specifications

型号 Model	分度号 Graduation	测温范围 ℃ Range of temperature measurement ℃	公称压力 Nominal pressure	流速 Flow rate	备注 Note
WRN-01T WRN_2-01T	K	0~1000	≤38MPa	≤100m/s	-
WRE-01T WRE_2-01T	E	0~800			
WZP-01T WZP_2-01T	Pt100	A级 -30-300 B级 -50-500			
WRN-624 WRN_2-624	K	0~1000	≤38MPa	≤80m/s	-
WRE-624 WRE_2-624	E	0~800			
WZP-624 WZP_2-624	Pt100	A级 -30-300 B级 -50-500			

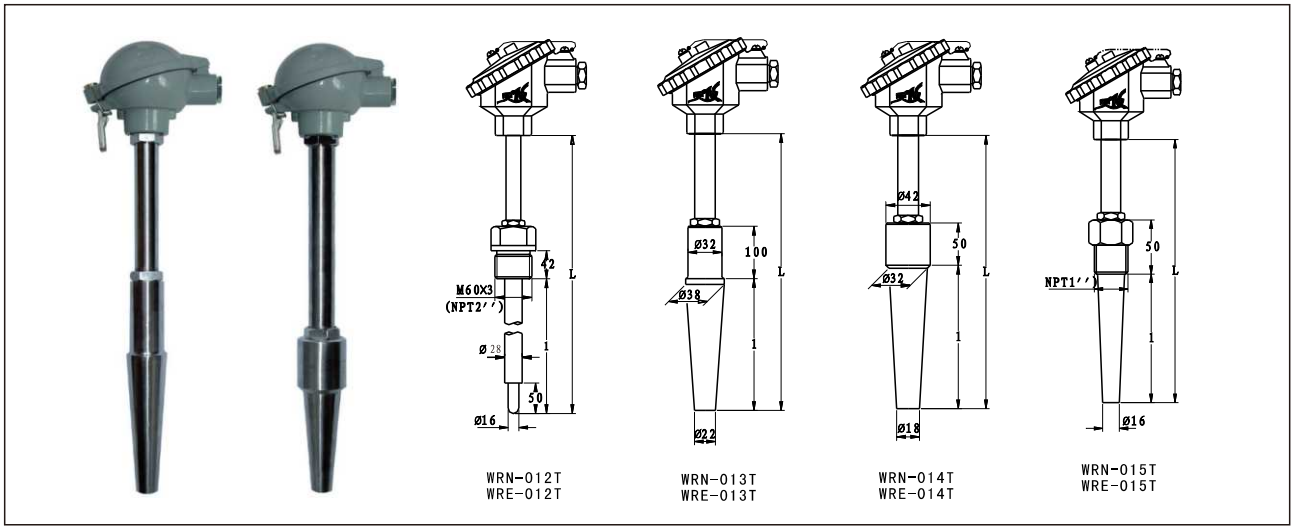

型号 Model	分度号 Graduation	测温范围 ℃ Range of temperature measurement ℃	公称压力 Nominal pressure	流速 Flow rate	规格 L×1 Specification L×1
WRN-012T WRN_2-012T	K	0~800	≤38MPa	--	440×230 640×430 840×630 1340×1130 2500×1200 640×430 3000×1500 3500×1700
WRE-012T WRE_2-012TE	E	0~600			
WZP-012T WZP_2-012T	Pt100	A级 -30-300 B级 -50-500			
WRN-012A WRN_2-012A	K	0~800			
WRE-012AT WRE_2-012AT	E	0~600			
WZP-012AT WZP_2-012AT	Pt100	A级 -30-300 B级 -50-500			
WRN-013T WRN_2-013T	K	0~800	≤38MPa	≤100m/s	380×50 430×100 480×150
WRE-013T WRE_2-013T	E	0~600			
WZP-013T WZP_2-013T	Pt100	A级 -30-300 B级 -50-500			
WRN-014T WRN_2-014T	K	0~800	≤38MPa	≤80m/s	280×50 330×100 380×150 430×200 480×250 530×300
WRE-014T WRE_2-014T	E	0~600			
WZP-14T WZP_2-14T	Pt100	A级 -30-300 B级 -50-500			
WRN-015T WRN_2-015T	K	0~800	≤38MPa		280×50 330×100 380×150 430×200 480×250 530×300 580×350 630×400
WRE-015T WRE_2-015T	E	0~600			
WZP-015T WZP_2-015T	Pt100	A级 -30-300 B级 -50-500			

安装形式

Application

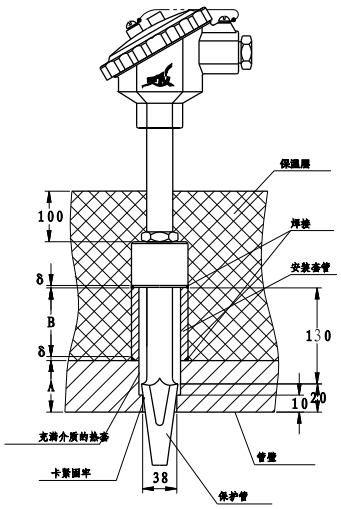

01T型安装示意
The installation sketching for type 01T

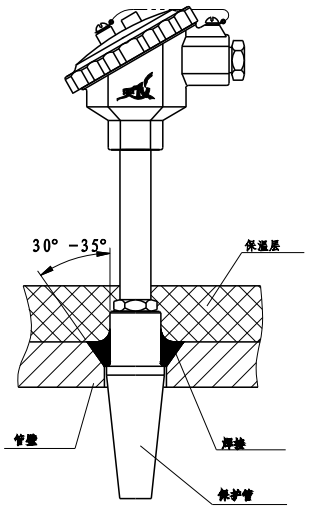

013T型安装示意
The installation sketching for type 013T

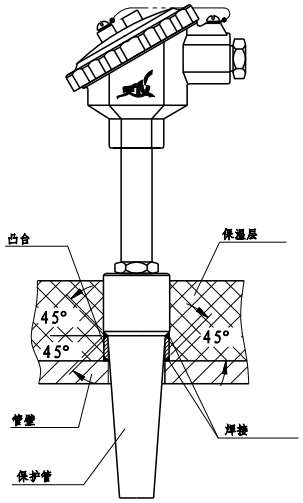

014T型安装示意
The installation sketching for type 013T

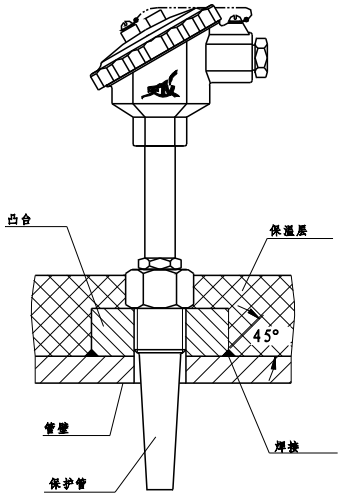

015T型安装示意
The installation sketching for type 013T

炉顶热电偶（阻）

Thermocouple on the top of the boiler (resistance)

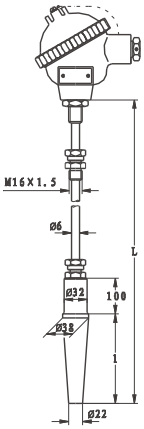

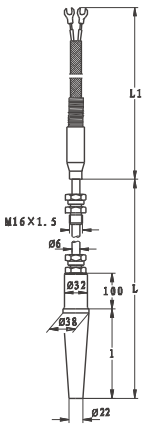

应用

适合于电厂锅炉炉顶及其他须远距离、高压测温场合

Application

Suitable for a power plant boiler roof and other required long distance, high pressure temperature measurement occasions

主要技术参数

电气出口：M16×1.5
连接尺寸：M16×1.5
防护等级：IP65

Main technical parameters

Electrical outlet：M16×1.5
Connection dimension：M16×1.5
Protection level：IP65

型号及规格

Model and specifications

型号 Model	分度号 Graduation	测温范围 ℃ Range of temperature measurement ℃	公称压力 Nominal pressure	流速 Flow rate	规格 Specification	
					L	l
WRN-0313T WRN_2-0313T	K	0~800	≤38MPa	≤100m/s	1000 2000 3000 4000 5000 6000 8000 10000 15000 20000 25000	50 100 150
WREK-0313T $WREK_2$-0313T	E	0~600				
WRNK-0913T $WRNK_2$-0913T	K	0~800				
WREK-0913T $WREK_2$-0913T	E	0~600				

1) 热电偶I级按协议订货；
2) 保护管材质为1Cr18Ni9Ti,其余材质根据协议订货。

1) Thermocouple of I grade is ordered according to the agreement.
2) The protection tube material is 1Cr18Ni9Ti and the rest of the material is ordered according to the agreement.

炉壁热电偶（阻） Thermocouple (resistance) for wall furnace

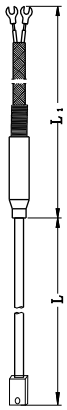

应用

适合于电厂锅炉炉壁、管壁及其它圆柱体表面测量

Application

It is suitable for the surface measurement of wall furnace of boiler, pipe wall and other cylinders in power plant.

主要技术参数

精度等级：Ⅰ、Ⅱ级
公称压力：常压
弯曲半径：R≥5D

Main technical parameters

Accuracy grade: I, II
Nominal pressure: atmospheric pressure
Bending radius: R≥5D

型号及规格 Model and specifications

型号 Model	分度号 Graduation	测温范围 ℃Range of temperature measurement ℃	测量端形式 Form in the measuring end	规格 Specification	
				L	L1
WRN-191M WRN_2-191M	K	0~800	绝缘式 Insulating type	1000 2000 3000 4000 5000 6000 8000 10000 15000 20000 25000	1000 2000 3000 4000 5000 6000 8000 10000 15000 20000 25000
WREK-191M $WREK_2$-191M	E	0~600			
WRNK-192M $WRNK_2$-192M	K	0~800	接壳式 Shell type		
WREK-192M $WREK_2$-192M	E	0~600			

1)热电偶I级按协议订货；
2)保护管材质为1Cr18Ni9Ti,其余材质根据协议订货。

1) Thermocouple I is ordered according to the agreement.
2) The material of the protection tube is 1Cr18Ni9Ti and the rest of the material is ordered according to the agreement.

型号及规格 Model and specifications

安装方法：
Installation method:
直接焊接于炉壁
Directly welded to the furnace wallM
M8 螺钉紧固
M8 screw fasteningType

选型时应注明R大小（即管壁或炉壁直径）
Selection should indicate the size of R (that is, the tube wall or wall diameter)

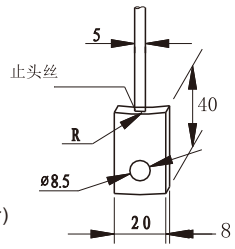

轴承热电偶（阻） Bearing thermocouple (resistance)

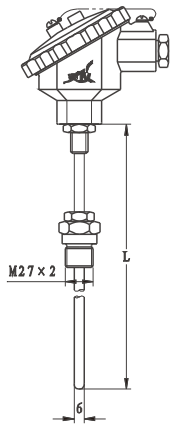

应用

适合于电厂带有轴承设备的轴承及其它须防震场合测温。

Application

It is suitable for temperature measurement of bearing in bearing equipment and other occasions in power plant.

主要技术参数

电气出口：M16×1.5
连接尺寸：M27×2
防护等级：IP65

Main technical parameters

Electrical outlet：M16×1.5
Connection dimension：M27×2
Protection level：IP65

型号及规格 Model and specifications

型号 Model	分度号 Graduation	测温范围 ℃ Range of temperature measurement ℃	热响应时间 Thermal response time	规格 Specification	
				L	l
WRN-316T WRN_2-316T	K	0~600	≤6s	Φ6	100 150 200 250 300
WREK-316T $WREK_2$-316T	E				
WZP-316T	Pt100	0~300			

热电偶I级、热电阻A级按协议订货。

Thermocouple of I grade and the thermal resistance of A class are ordered according to the agreement.

端面热电阻 End face thermal resistance

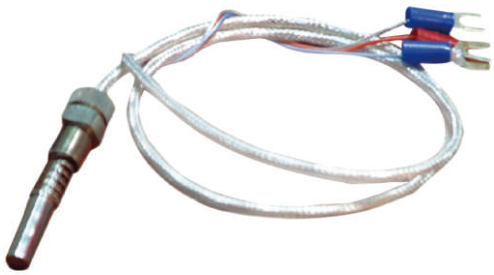

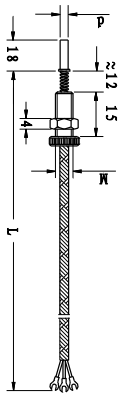

应用

适用于测量电厂汽轮机及电机轴瓦或其它机体表面温度

Application

It is suitable for the measurement of steam turbine and motor bearing or other body surface temperature.

主要技术参数

精度等级：A、B级
公称压力：常压

Main technical parameters

Accuracy level: A, B
levelNominal pressure: atmospheric pressure

型号及规格 Model and specifications

型号 Model	分度号 Graduation	测温范围 ℃ Range of temperature measurement ℃	热响应时间 Thermal response time	规格 Specification		L
				L	I	
WZCM-201	Cu50 Cu100	0~100	≤6s	Φ6	M8×0. 75	500 1000 1500 2000 2500
WZPM-201	Pt100	A级 −30-300 B级 −50-500			M10×1	

热电阻A级按协议订货

Thermal resistance a class by agreement order;

安装形式 Installation form

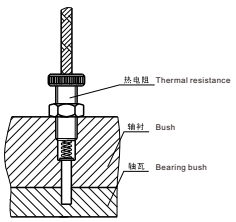

耐磨热电偶（阻） Wear-resistant thermocouple

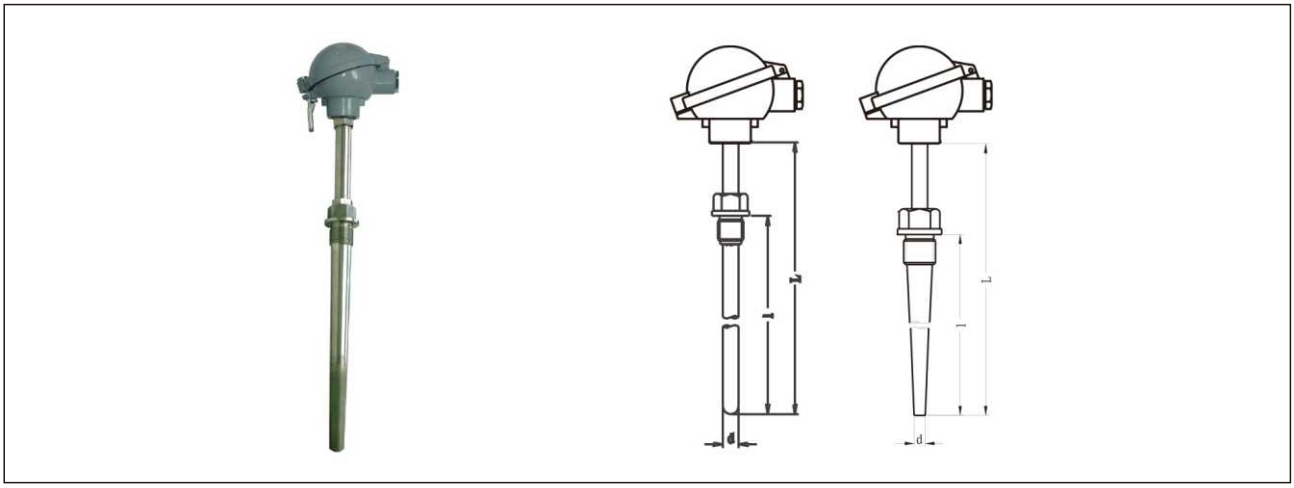

应用

适合于电厂球磨机及磨煤机等对保护管磨损严重的场合

Application

It is suitable for ball mill and coal mill and other occasions where the protection pipe is seriously wore in power plant.

主要技术参数

电气出口：M20×1.5, NPT1/2
耐磨头硬度：HRC62～65
防护等级：IP65

Main technical parameters

Electrical outlet: M20×1.5, NPT1/2
Hardness of wear-resistance head : HRC62～65
Protection level：IP65

型号及规格 Model and specifications

型号 Model	分度号 Graduation	测温范围 ℃ Range of temperature measurement ℃	公称压力 Nominal pressure	流速 Flow rate	规格 Specification	
					d	L×1
WRN-230NM WRN_2-230NM	K	0~1000	≤10MPa	≤100m/s	Φ6	300×150 350×200 400×250 450×300 500×350 550×400 650×500 900×750 1150×1000
WRE-230NM WRE_2-230NM	E	0~800				
WZP-230NM WZP_2-230NM	Pt100	A级 -30-300 B级 -50-500				
WRN-630NM WRN_2-630NM	K	0~1000	≤30MPa	≤80m/s	Φ15	
WRE-630NM WRE_2-630NM	E	0~800				
WZP-630NM WZP_2-630NM	Pt100	A级 -30-300 B级 -50-500				

1)热电偶I级、热电阻A级按协议订货；
2)保护管材质为1Cr18Ni9Ti，其余材质根据协议订货。

1) Thermocouple of I grade and the thermal resistance of A class are ordered according to the agreement.
2) The material of the protection tube is 1Cr18Ni9Ti and the rest of the material is ordered according to the agreement.

石油化工热电偶（阻）

Petroleum chemical thermocouple (resistance)

应用

专业针对石油化工部门设计，可以直接测量-200℃~1600℃范围内液体、蒸汽和气体介质以及固体表面测温。

Application

Professional design for the petrochemical sector, you can directly measure the -200 C ~1600 C range of liquid, steam and gas medium and solid surface temperature measurement.

主要技术参数

产品执行标准

IEC584　　GB/T30429-2013
IEC60751　　GB/T30121-2013
GB26786-2011　　JB/T8623

Main technical parameters

Product implementation standard

IEC584　　GB/T30429-2013
IEC60751　　GB/T30121-2013
GB26786-2011　　JB/T8623

工作原理

热电偶的电极由两根不同导体材质组成。当测量端与参比端存在温差对，就会产生热电势，工作仪表便显示出热电势所对应的温度值。

热电阻是利用电阻与温度呈一定函数的关系原理。当被测介质中有温度变化时，其电阻值也随着发生变化，工作仪表便显示出电阻值所对应的温度值。

Working principle

The electrode of the thermocouple is composed of two different conductor materials. When there is a difference in temperature between the measuring end and the reference end, the heat potential will be generated, and the working instrument will show the corresponding temperature value of the thermal electric potential.Thermal resistance is the principle of the relationship between resistance and temperature. When the temperature changes in the measured medium, the resistance value also changes with the change, the working instrument will show the resistance value of the corresponding temperature value.

公称压力

一般是指在常温下，保护管所能承受的静态外压而不破裂。允许工作压力不仅与保护管材料、直径、壁厚有关，且与其结构形式、安装方法及被测介质的流速、种类有关。

Nominal pressure

Generally refers to the room temperature, the protection of the tube can withstand the static pressure without cracking. The working pressure is not only related to the material, diameter and wall thickness of the protective tube, but also with the structure, the installation method and the flow rate and the type of the measured medium.

测温范围及允差

Range of temperature measurement and error tolerance

热电偶　　Thermocouple

型号 Model	分度号 Graduation	允差等级 Error-tolerance level			
		I		II	
		允差值 Error-tolerance value	测温范围 ℃ Range of temperature measurement ℃	允差值 Error-tolerance value	测温范围 ℃ Range of temperature measurement ℃
WRN	K	±1.5℃	-40~+375	±2.5℃	-40~+333
		±0.004|t|	375~1000	±0.0075|t|	333~1200
WRE	E	±1.5℃	40~+375	±2.5℃	-40~+333
		±0.004|t|	375~800	±0.0075|t|	333~900
WRP	S	±1℃	0~+1100	±1.5℃	0~+600
		±[1+0.003(t-1100)]	1100~1600	±0.0025|t|	600~1600
WRQ	R	±1℃	0~+1100	±1.5℃	0-600
		±[1+0.003(t-1100)]	1100~1600	±0.0025|t|	600-1600
WRR	B	--	--	±0.0025|t|	600-1700
		--	--	--	--

热电阻　　Thermal resistance

型号 Model	分度号 Graduation	测温范围 ℃ Range of temperature measurement ℃	精度等级 Precision grade	允许差值 Error-tolerance value
WZP	Pt100	A级 -30-300 B级 -50-500	A	±(0.15+0.002|t|)
			B	±(0.30+0.005|t|)
WZC	Cu50 Cu100	-50~+100	--	±(0.30+0.006|t|)

裂解炉专用热电偶

Specialized thermocouple for splitting decomposition furnace

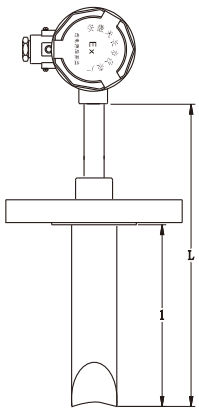

应用

热电偶保护管采用特殊结构，使之紧贴于裂解炉管内侧，同时又不影响物料流动。适合于乙稀生产过程中裂解炉温度测量与控制。

Application

The protection tube of thermocouple uses the special structure so that it is close to the inner side of the splitting decomposition furnace tube and it does not affect the flow of material. It is suitable for measurement and control of temperature in the production process of ethylene splitting decomposition furnace.

主要技术参数

电气出口：M20×1.5,NPT1/2
连接尺寸：M27×2,NPT3/4
防护等级：IP65
隔爆等级：d Ⅱ CT6
精度等级： Ⅰ 级

Main technical parameters

Electrical outlet: M20×1.5,NPT1/2
Connection dimension：M27×2,NPT3/4
Protection level：IP65
Explosion-proof grade：d Ⅱ CT6
Precision grade： Ⅰ

型号及规格 Model and specifications

型号 Model	分度号 Graduation	测温范围 ℃ Range of temperature measurement ℃	热响应时间 Thermal response time	规格 Specification
WRNG-440T WRN_2G-440T	K	0~1000	＜180s	430×200 480×250

法兰为ANSI B16.5-88 21/2"300LB RF
The flange is ANSI B16.5-88 21/2"300LB RF

安装示意图 Model and specifications

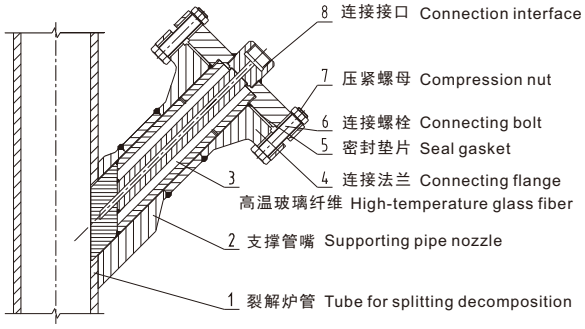

高温高压热电偶

High temperature and high pressure thermocouple

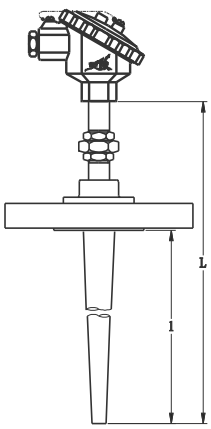

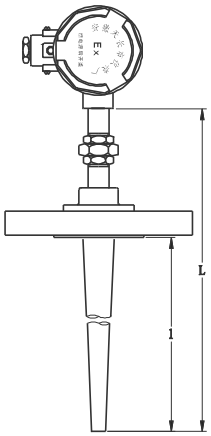

应用

适合于石油、化工等生产过程中的高温高压场所的温度测量与控制。是炼油厂、高压聚乙烯等不可缺少的温度装置。

Application

Temperature measurement and control for high temperature and high pressure place in the production process of petroleum and chemical industry. Is a refinery, high pressure polyethylene and other indispensable temperature device.

主要技术参数

电气出口：M20 × 1.5,NPT1/2
连接尺寸：M20 × 1.5,NPT1/2
防护等级：IP65
隔爆等级：d Ⅱ BT4,d Ⅱ CT5
公称压力：15~40MPa

Main technical parameters

Electrical outlet: M20 * 1.5, NPT1/2
Connection dimension: M20 * 1.5, NPT1/2
Protection level: IP65
xplosion proof grade: BT4 II d, D II Ct5
Nominal pressure: 15~40MPa

型号及规格 Model and specifications

型号 Model	分度号 Graduation	测温范围 ℃ Range of temperature measurement ℃	热响应时间 Thermal response time	保护管材料 Material for protective tube	规格 Specification
WRNG-430 WRN_2G-430	K	0~1000	＜180s	1Cr18Ni9Ti	380×150 430×200 480×250 530×300 580×350 630×400 680×450
WREG-430 WRE_2G-430	E	0~800			
WRNG-440 WRN_2G-440	K	0~1000			
WREG-440 $WREG_2$-440	E	0~800			

1)热电偶I级按协议订货；
2)保护管其余材质根据协议订货；
3)型号430为防水式，型号440为隔爆式。

1) thermocouple I order according to the agreement.
2) protect the remaining material according to the order of the agreement.
3) model 430 is waterproof type, the model 440 is the explosion proof type.

保护管材质及选用 Material and selection of protective tube

材质 Texture of material	使用温度 ℃ Using temperature	特点及用途 Features and uses
1Cr18Ni9Ti	-200 ~ 800	具有高温耐蚀性，通常作为一般耐热钢使用 With high temperature corrosion resistance, usually used as a general heat resistant steel
304	-200 ~ 800	低碳含量，具有良好耐晶间腐蚀性，通常作为一般耐热钢使用 Low carbon content, with good resistance to intergranular corrosion, usually used as a general heat resistant steel
316	-200 ~ 750	低碳含量，具有良好耐晶间腐蚀性，作为耐热钢使用 Low carbon content, with good resistance to intergranular corrosion, as the use of heat resistant steel
316L	-200 ~ 750	超低碳含量，具有良好耐晶间腐蚀性，作为耐热钢使用 Ultra low carbon content, with good resistance to intergranular corrosion, as the use of heat resistant steel
310S	-200 ~ 1000	具有高温抗氧化性，耐腐蚀性，通常作为耐热钢使用 With high temperature oxidation resistance, corrosion resistance, usually used as heat resistant steel
Gh3030	0 ~ 1100	镍基高温合金钢，具有优良抗氧化性，耐腐蚀型，通常作为耐热钢使用 Nickel based high temperature alloy steel, with excellent oxidation resistance, corrosion resistance, usually used as heat resistant steel

套管形式选择 Selection of casing form

法兰可选择900(PN15) ~ 2500LB(PN40)RJ等不同形式

The flange can be 900(PN15) ~ 2500LB(PN40)RJ and other forms

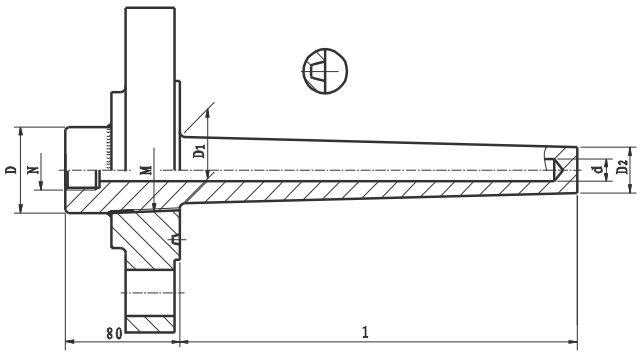

代 号 Code	N	M	D	d	D1	D2
A	AM20×1.5 (NPT1/2)	NPT1”	Φ34	Φ9	Φ23	Φ18
B		BNPT11/4”	Φ45	Φ9	Φ28	Φ23

法兰型号及规格 Flange model and specification

法兰标准代号 The standard code of flange

标准代号 The standard code	文件编号 No.of document
中国国家标准 China National Standard	Gb9112 ~ 9131-88
中国化工部标准 Standards of Chinese Ministry of Chemical Industry	Hg20592 ~ 20635-97 (HGJ44 ~ 76-91) (HG5001 ~ 5028-58)
中国机械部标准 Standards of the Chinese Ministry of Machinery	JB/T74 ~ 90-94 (JB81 ~ 82-59)
美国标准 American Standard	ASME/ANSI B16.5
德国标准 German Standard	DIN 2628 ~ 2638
日本标准 Japanese Standard	JIS2201

法兰规格

CLASS150 ~ 600 RF
CLASS900 ~ 2500 RJ

Flange specification

CLASS150 ~ 600 RF
CLASS900 ~ 2500 RJ

选型须知

1）型号
2）分度号
3）精度等级
4）保护管材质及形式
5）法兰规格及形式
6）长度或插入深度
例A:高温高压隔爆热电偶,K型,Ⅰ级,保护管A级型,插入深度300mm.
WRNG−440A L × l = 450 × 300 dIIBT4 316L
ANSI 1” 1500#RJ

Flange specification

Notice for model selection
1) Model
2) Graduation
3) Accuracy level
4)The material and form of protection tube
5) Specification and form of flange
6) Length or the inserting depth

Example A: the explosion-proof thermocouple with high temperature and high pressure , K type, Ⅰ grade and the protection tube is A level with the inserted depth being 300mm.
WRNG-440A L×l = 450×300 dIIBT4 316L ANSI 1” 1500#RJ

耐磨切断热电偶 Wear resistant cutting thermocouple

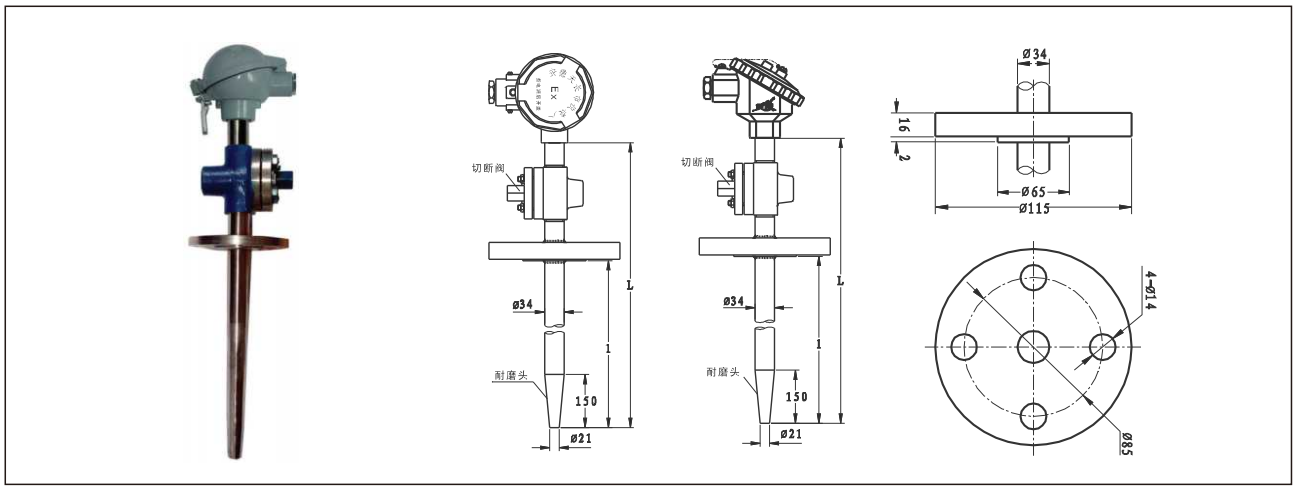

应用

通过在耐磨头堆焊Ni + Wc35, 使钢的硬度提高,适用于生产现场存在高耐磨固体颗粒或流体,当保护管发生损坏时可切断热电偶,是炼油厂催化裂化不可缺少的测温装置。

Application

The head wear surfacing Ni + Wc35, the hardness of the steel increased, suitable for the production site has high wear resistance of solid particles or fluid, when the protective tube is damaged can cut the thermocouple temperature measuring device is FCC indispensable.

主要技术参数

电气出口：M20×1.5，NPT1/2
耐磨头硬度：HRC62～65
防护等级：IP65
隔爆等级：dⅡBT4,dⅡCT5
公称压力：2.5MPa

Main technical parameters

Electrical outlet: M20 * 1.5, NPT1/2
Wear head hardness: HRC62 ~ 65
Protection level: IP65
Explosion proof grade: BT4 II d, D II Ct5
Nominal pressure: 2.5MPa

型号及规格 Model and specifications

型号 Model	分度号 Graduation	测温范围 ℃ Range of temperature measurement ℃	保护管材料 Material for protective tube	热响应时间 Thermal response time	规格 Specification
WRP-430MQ WRP_2-430MQ	S	0~1300	GH214	＜180s	450×300 500×350 550×400 600×450 650×500 750×600 950×750 1150×1000
WRN-430MQ WRN_2-430MQ	K	0~1000	GH3030		
		0~800	1Cr18Ni9Ti		
WRE-430MQ WRE_2-430MQ	E	0~800	1Cr18Ni9Ti		
WRP-440MQ WRP_2-440MQ	S	0~1300	GH214		
WRN-440MQ WRN_2-440MQ	K	0~1000	GH3030		
		0~800	1Cr18Ni9Ti		
WRE-440MQ WRE_2-440MQ	E	0~800	1Cr18Ni9Ti		

1)热电偶I级按协议订货；
2)型号430为防水式，型号440为隔爆式。

1) thermocouple I order according to the agreement.
2) model 430 is waterproof type, the model 440 is the explosion proof type.

耐磨阻漏热电偶

Wear-resistance and and anti-leakage thermocouple

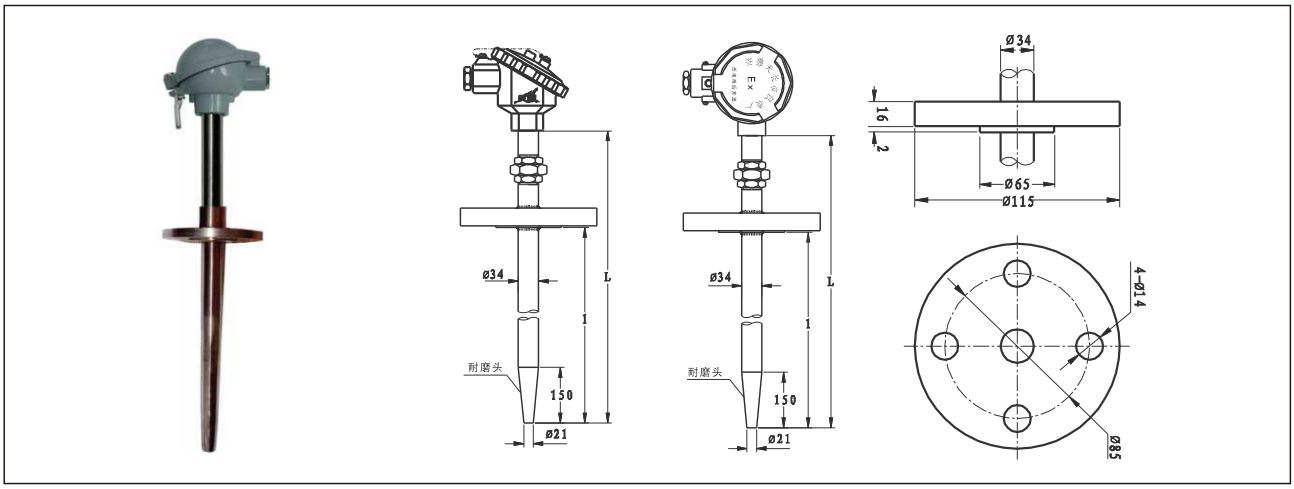

应用

在热电偶内部采用卡套卡死偶丝，彻底防止漏油或漏气。适用于生产现场存在高耐磨固体颗粒或流体，是炼油厂不可缺少的测温装置。

Application

In the thermocouple inside the use of the card sleeve card dead even silk, completely prevent leakage or leakage. It is suitable for the production of high wear-resistant solid particles or fluid in the field. It is an indispensable temperature measuring device for oil refinery.

主要技术参数

电气出口:M20×1.5NPT1/2
耐磨头硬度:HRC62～65
防护等级:IP65
隔爆等级:dⅡBT4,dⅡCT5
公称压力:2.5MPa

Main technical parameters

Electrical outlet: 1.5NPT1/2 * M20
Wear head hardness: HRC62～65
Protection level: IP65
Explosion proof grade: BT4 II d, D II Ct5
Nominal pressure: 2.5MPa

型号及规格 Model and specifications

型号 Model	分度号 Graduation	测温范围 ℃ Range of temperature measurement ℃	热响应时间 Thermal response time	保护管材料 Material for protective tube	规格 Specification
WRN-430M WRN_2-430M	K	0~1000	＜180s	1Cr18Ni9Ti	450×300 500×350 550×400 600×450 650×500 750×600 950×750 1150×1000
WRE-430M WRE_2-430M	E	0~800			
WRN-440M WRN_2-440M	K	0~1000			
WRE-440M WRE_2-440M	E	0~800			

1)热电偶I级按协议订货；
2)保护管其余材质根据协议订货。

1) Thermocouple I is ordered according to the agreement.
2) The rest of the material for the protection tube is ordered according the agreement.

吹气热电偶 Blowing thermocouple

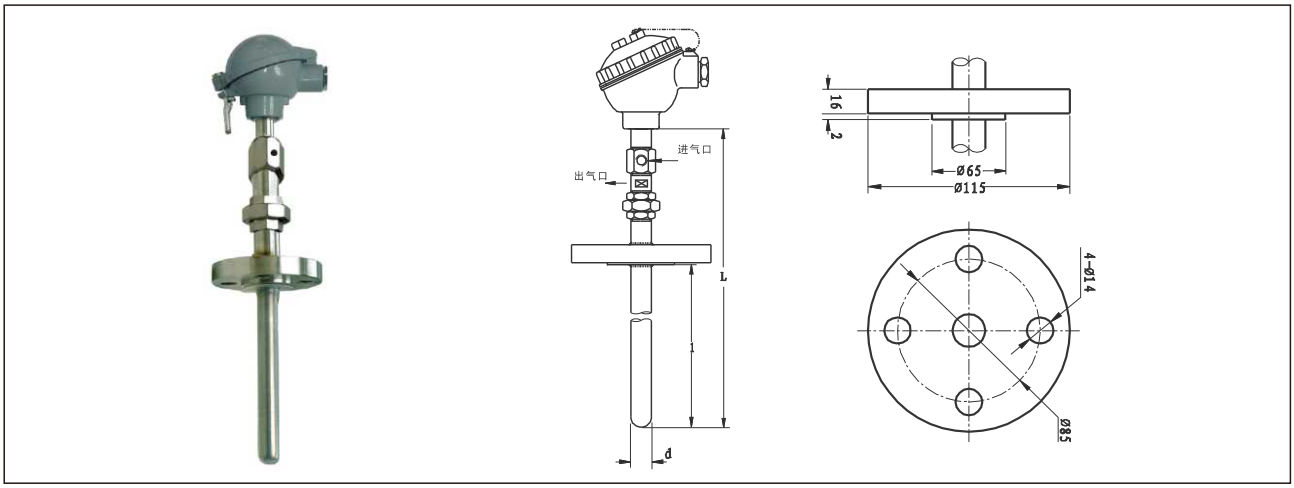

应用

通过吹进氮气或其它气体，将有害气体送出保护管外，从而提高热电偶寿命。是30万吨合成氨装置中不可缺少的测温装置。

Application

the harmful gas is sent out of the protective tube by blowing in the nitrogen or other gases so as to increase thermocouple life, so it is the indispensable temperature measuring device in synthetic ammonia plant with capacity of 300000 ton.

主要技术参数

电气出口：M20×1.5, NPT1/2
精度等级：Ⅰ、Ⅱ
防护等级：IP65
公称压力：常压

Main technical parameters

Electrical outlet: M20 * 1.5, NPT1/2
Connection dimension: M20 * 1.5, NPT1/2
Protection level: IP65
xplosion proof grade: BT4 II d, D II Ct5
Nominal pressure: 15~40MPa

型号及规格 Model and specifications

型号 Model	分度号 Graduation	测温范围 ℃ Range of temperature measurement ℃	流速 Flow rate	规格 Specification	
				d	L×1
WRPC-230NM WRP_2C-230NM	S	0~1300	高铝质 Gh3039	Φ16	900×750 1000×850 1150×1000

1)热电偶I级按协议订货；
2)保护管其余材质根据协议订货。

1) Thermocouple I is ordered according to the agreement
2) The rest of the material for the protection tube is ordered according the agreement.

多点热电偶 Multipoint thermocouple

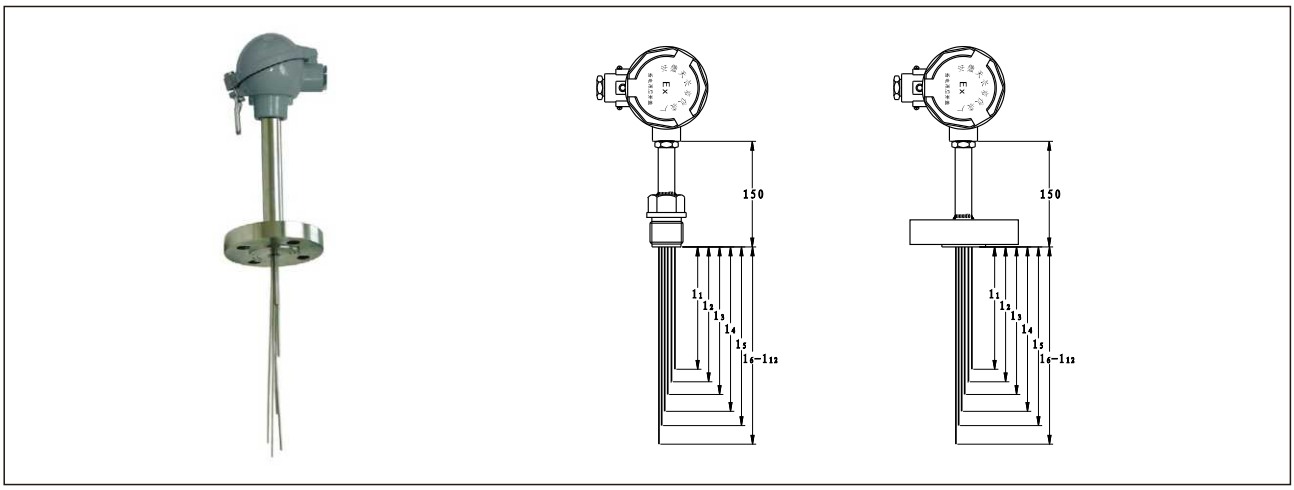

应用

适用于生产现场存在温度梯度不显著，须同时测量多个位置或位置的多处测量。广泛应用于大化肥合成塔、存储罐等装置中。

Application

It is suitable for the circumstance where the temperature gradient is not significant and measurements in multiple points are required at the same time. It is widely used in large synthesis tower for chemical fertilizer, storage tank and other devices.

主要技术参数

电气出口:M27×2, NPT3/4
热响应时间:≤8S
偶丝直径:Φ3
防护等级:IP65

Main technical parameters

Electrical outlet:M27×2, NPT3/4
Thermal response time:≤8S
The diameter of The thermocouple wire:Φ3
Protection level:IP65

型号及规格 Model and specifications

型号 Model	分度号 Graduation	测温范围 ℃ Range of temperature measurement ℃	测温点数 Temperature-measuring points	保护管材料 Material for protective tube
WRN-230D	K	0～1000	2～12	GH3030
		0～800		1Cr18Ni9Ti
WRE-230D	E	0～800		1Cr18Ni9Ti
WRN-430D	K	0～1000		GH3030
		0～800		1Cr18Ni9Ti
WRE-430D	E	0～800		1Cr18Ni9Ti

1)热电偶I级按协议订货；
2)保护管其余材质根据协议订货；
3)外保护管用户应自备。

1) Thermocouple I is ordered according to the agreement.
2) The rest of the material for the protection tube is ordered according the agreement.
3) For the outer protection tube, the users should prepare on their own.

型号及规格 Model and specifications

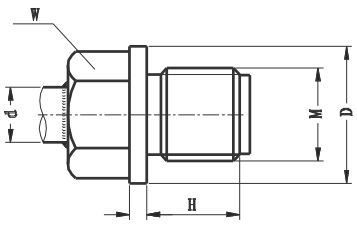

固定螺纹
Fixed screw thread

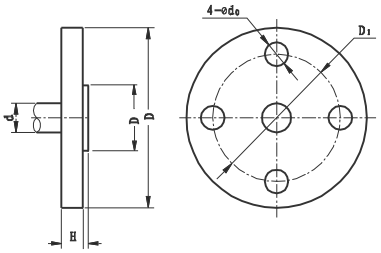

固定法兰
Fixed flange

固定螺纹 Fixed screw thread

测温点数 Temperature measuring points	M	D	H	h	W	d
2~6	M27×2	Φ40	28	5	32	Φ20
7~12	M33×2	Φ48	33	5	36	Φ34

固定法兰 Fixed flange

测温点数 Temperature measuring points	M	D	H	h	W	d
2~6	Φ105	Φ75	Φ55	5	32	Φ20
7~12	Φ115	Φ85	Φ65	5	36	Φ34

选型须知

1)型号
2)分度号
3)精度等级
4)热电偶点数
5)安装固定形式
6)保护管材质
7)长度或插入深度

例:多点热电偶,k型,3点,L级,固定螺纹M27×2, L1=1200,L2=1500, L2=2000,WRN-220D3 I级L1=1200, L2=1500, L2=2000,螺纹M27×2.

Notice for model selection

1) Model
2) Graduation
3) Precision grade
4) The thermocouple point
5) Installation and fixation form
6) Material for protective tube
7) Length or the inserted depth

Example: Multipoint thermocouple, K type, 3 point, L level, fixed screw thread: M27×2, L1=1200,L2=1500, L2=2000,WRN-220D3 I grade, L1=1200, L2=1500, L2=2000, screw thread:M27×2.

多点隔爆热电偶

Multiple points explosion-proof thermocouple

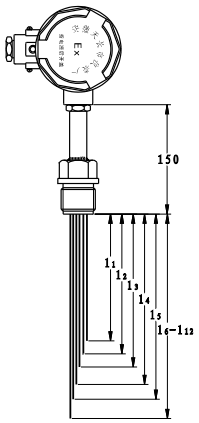

应用

适合于产现场存在易燃易爆化合物，须同时测量多个位置或的多和处测量。广泛应用于石油化工精馏塔装置。

Application

It is suitable for the production sites with flammable and explosive compounds where more than one position must be measured at the same time. It is widely used in petrochemical distillation column device.

主要技术参数

电气出口：M20×1.5NPTI1/2
热响应时间：≤8S
偶丝直径：Φ1、Φ2、Φ3
防护等级：IP65
隔爆等级：dIIBT4、dIICT5

Main technical parameters

Electrical outlet：M20×1.5NPTI1/2
Thermal response time：≤8S
Diameter of thermocouple wire：Φ1、Φ2、Φ3
Protection level：IP65
Explosion-proof grade：dIIBT4、dIICT5

型号及规格 Model and specifications

型号 Model	分度号 Graduation	测温范围 ℃ Range of temperature measurement ℃	测温点数 Temperature-measuring points	安装固定形式 Installation and fixation form
WRN-240DK	K	0~1000	2 ~ 12	固定螺纹
		0~800		
WRE-240D	E	0~800		
WRN-440D	K	0~1000		固定法兰
		0~800		
WRE-440D	E	0~800		

1)热电偶I级按协议订货；
2)保护管其余材质根据协议订货；
3)外保护管用户应自备。

1) Thermocouple I is ordered according to the agreemen.
2) The rest of the material for the protection tube is ordered according the agreement.
3) For the outer protection tube, the users should prepare on their own.

防腐热电阻 Anti-corrosion thermal resistance

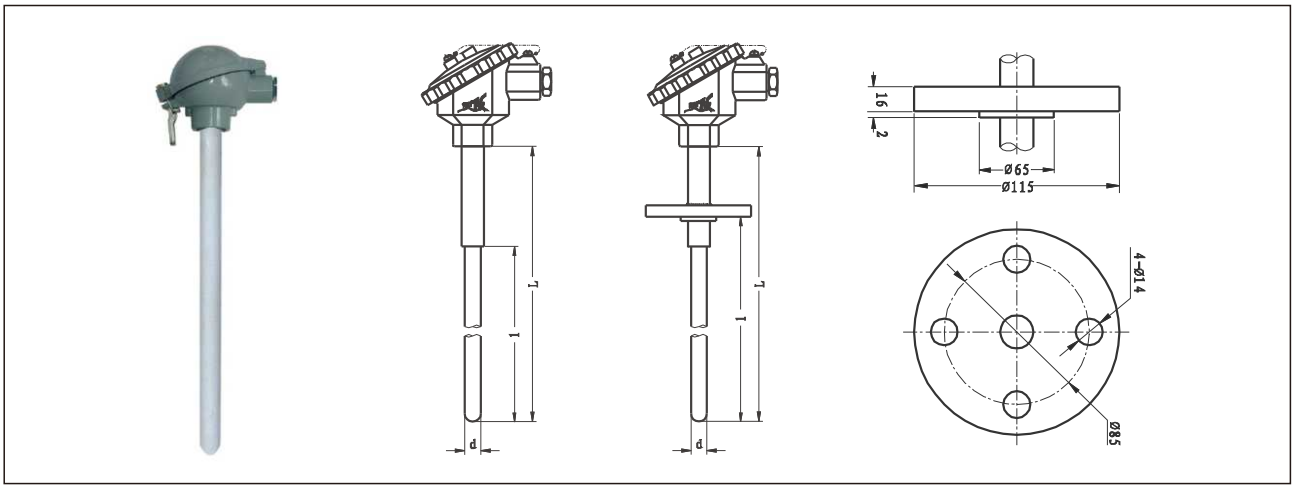

应用

采用新型防腐材料，外包覆聚四氟乙烯F46，适用于石油化工各种腐蚀性介质中测温。是氯碱行业的专用测温仪表。

Application

It adopts the new anti-corrosion materials with PTFE F46 being rapped externally and it is suitable for temperature measurement in all kinds of corrosive medium in petrochemical industry. It is a special temperature-measuring instrument in chlor alkali industry.

主要技术参数

电气出口:M20×1.5,NPTI1/2
热响应时间:≤8s
防护等级:IP65
隔爆等级:dIIBT4.dIICT5

Main technical parameters

Electrical outlet:M20×1.5,NPTI1/2
Thermal response time:≤8s
Protection level:IP65
Explosion-proof grade:dIIBT4.dIICT5

型号及规格 Model and specifications

型号 Model	分度号 Graduation	测温范围 ℃ Range of temperature measurement ℃	热响应时间 Thermal response time	保护管材料 Material for protective tube	规格 Specification	
					d	L×1
WZPF-130 WZP_2F-130	Pt100	A级 -30-300 B级 -50-500	＜80s	1Cr18Ni9Ti	Φ16	300×150 350×200 400×250 450×300 500×350 550×400 600×450 650×500 750×600 1000×850
WZCF-130 WZC_2F-130	Cu50 Cu100	0~150				
WZPF-430 WZP_2F-430	Pt100	A级 -30-300 B级 -50-500				
WZCF-430 WZC_2F-430	Cu50 Cu100	0~150				

1)热电阻A级按协议订货；
2)保护管其余材质根据协议订货。

1) Thermocouple grade A is ordered according to the agreement.
2) The rest of the material for the protection tube is ordered according the agreement.

高温防腐热电偶

High-temperature anti-erosion thermocouple

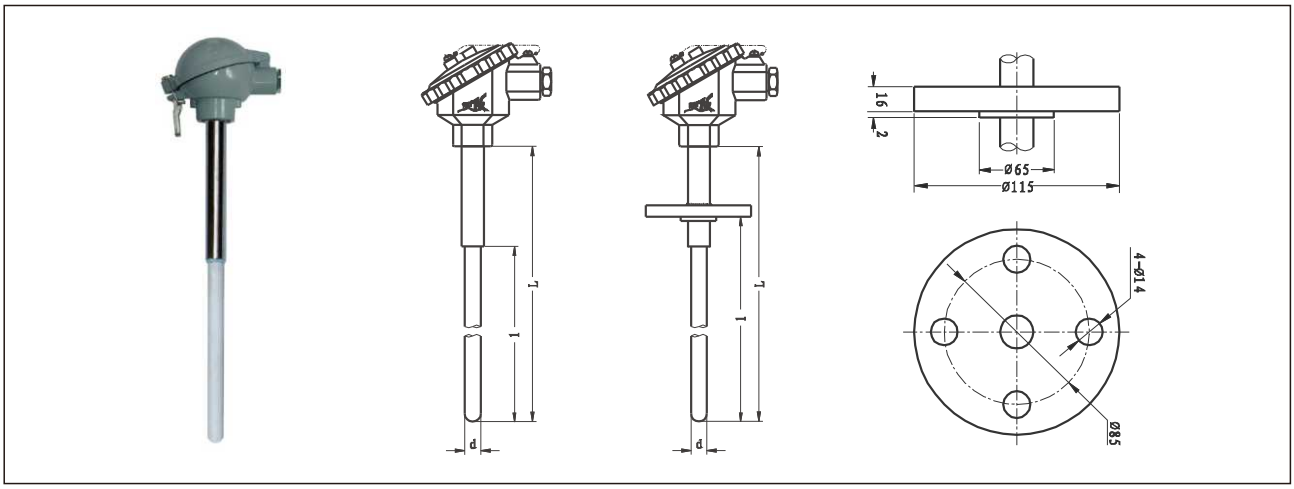

应用

适用于各种生产过程中高温、腐蚀性场合，广泛应用石油化工、冶炼玻璃及陶瓷工业测温。

Application

It adopts the new anti-corrosion materials with PTFE F46 being rapped externally and it is suitable for temperature measurement in all kinds of corrosive medium in petrochemical industry. It is a special temperature-measuring instrument in chlor alkali industry.

主要技术参数

电气出口:M20×1.5, NPT1/2
精度等级:Ⅱ
防护等级:IP65

Main technical parameters

Electrical outlet:M20×1.5, NPT1/2
Precision grade:Ⅱ
Protection level:IP65

型号及规格 Model and specifications

型号 Model	分度号 Graduation	测温范围 ℃ Range of temperature measurement ℃	保护管材料 Material for protective tube	热响应时间 Thermal response time	规格 Specification	
					d	L×1
WRPF-130G WRP_2F-130G	S	0~1300	3YC52 Al2O3	<80m/s	Φ16	300×150 350×200 400×250 450×300 500×350 550×400 600×450 650×500 750×600 1000×850
WRQF-130G WRQ_2F-130G	R	0~1300				
WRRF-130G WRR_2F-130G	B	0~1600	MoSi2			
WRPF-430G WRP_2F-430G	S	0~1300	3YC52			
WRQF-430G WRQ_2F-430G	R	0~1300				
WRRF-430G WRR_2F-430G	B	0~1600	MoSi2			

热电偶I级按协议订货

Thermocouple grade I is ordered according to the agreement.

炉管刀刃热电偶 Cutting-edge thermocouple for furnace tube

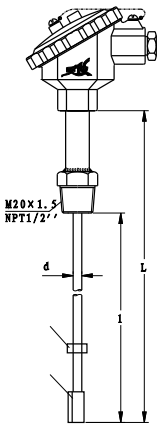

应用

采用刀刃式接头直接焊接于炉管表面，适用于石油工业炉管、塔壁表面温度测量。是炼油厂分馏塔必备测温装置。

Application

It adopts the cutting-edge joint which is directly welded on the surface of the furnace tube. It is suitable for temperature measurement for furnace tube and wall tower of petroleum industry. It is the indispensable temperature-measuring device for refinery distillation column.

主要技术参数

电气出口:M20×1.5, NPT1/2
精度等级:Ⅰ、Ⅱ
防护等级:IP65
公称压力:10MPa

Main technical parameters

Main technical parameters
Electrical outlet:M20×1.5, NPT1/2
Precision grade:Ⅰ、Ⅱ
Protection level:IP65
Nominal pressure:10MPa

型号及规格 Model and specifications

型号 Model	分度号 Graduation	测温范围 ℃ Range of temperature measurement ℃	保护管材料 Material for protective tube	热响应时间 Thermal response time	规格 Specification	
					d	L×1
WRNK-231DR	K	0~1100	GH3030 446SS	≤10s	Φ8 Φ12.7	1000 1500 2000 3000
		0~800	1Cr18Ni9Ti			

1)热电偶I级按协议订货；
2)保护管其余材质根据协议订货。

1) Thermocouple I is ordered according to the agreement.
2) The rest of the material for the protection tube is ordered according the agreement.

气化炉高温热电偶

Cutting-edge thermocouple for furnace tube

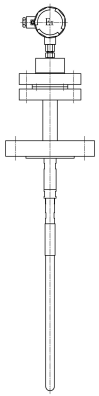

应用

适用于煤气化行业-气化炉炉膛。煤化工行业GE-TEXACO炉膛测温专用。其优点为当炉砖及衬里厚度发生改变时，热电偶可调节自身伸缩量，达到最佳测温位置。通过万向转球，限位导管，减震弹簧等及采用进口无压烧结碳化硅外保护管，内层缓热型内保护管，热电偶具有耐高温、高压、耐磨、耐热振、良好气密性、二级阻漏结构等诸多优点，是GE-TEXACO炉膛测温的专用高温热电偶。专利证书：ZL 2014 2 0622012.3。

Application

Suitable for coal gasification industry. GE-TEXACO furnace temperature measurement in coal chemical industry. The utility model has the advantages that when the furnace brick and the thickness of the lining are changed, the thermocouple can adjust the amount of self expansion to reach the optimum temperature measurement position. Through the universal rotating ball, limiting catheter, and damping spring imported sintered silicon carbide outer protection tube, inner heat type corrosion protection tube, thermocouple has many advantages such as high temperature, high pressure, abrasion resistance, heat resistance, good air tightness and vibration level two leakage preventing structure, is a special high temperature thermocouple GE-TEXACO furnace temperature measurement. Patent certificate: ZL 201420622012.3.

主要技术参数

IEC751
GB/T1598-2010

Main technical parameters

IEC751
GB/T1598-2010

型号及规格 Model and specifications

型号 Model	分度号 Graduation	测温范围 ℃ Range of temperature measurement ℃	公称压力 Nominal pressure	保护管材料 Material for protective tube	规格 Specification
WRP-430QH	SB	0-1600℃	≤10MPa	碳化硅 silicon carbide	950*750

特殊热电偶(阻) Special thermocouple (resistance)

应用

特殊结构设计，适合不同场合。可以以直接测量-200℃~1600℃范围内液体、蒸汽和气体介质以及固体表面温度。

Application

It is designed with special structure and suitable for different occasions. It is able to directly measure the surface temperature of the liquid, vapor, gas and solid within -200℃~1600℃.

主要技术参数

1.产品执行标准
Ec584
IEC60751
JB/T5582-2014

2.公称压力
一般是指在常温下，保护管所承受的静态外压而不破裂。允许工作压力不仅与保护管材料、直径、壁厚有关，且与其结构形式、安装方法及被测介质的流速、种类有关。

3.常温绝缘的电阻
一般是指在常温下，保护管所承受的静态外压而不破裂。允许工作压力不仅与保护管材料、直径、壁厚有关，且与其结构形式、安装方法及被测介质的流速、种类有关。

Main technical parameters

1.Standard for product implementation
IEC584
IEC60751
JB/T5582-2014

2.Nominal pressure
Generally, it refers the static pressure bear by the protective tube without cracking in room temperature. The allowed working pressure is not only related to the material, diameter and the thickness of the protective tube wall, but also related to the structure, the installation method, the flow rate and the type of the measured medium.

3.Insulation resistance at room temperature
The environment temperature of thermocouple is 20±15℃, the relative humidity is not more than 80%, the test voltage is 500±50V(DC), the insulation resistance between electrode and outer sleeve≥1000MΩ. The environment temperature of thermal resistance is 15~35℃, the relative humidity is not more than 80%, the test voltage is 10~100V(DC), the insulation resistance between electrode and outer sleeve≥100MΩ. od, the flow rate and the type of the measured medium.

热电偶 Thermocouple

型号 Model	分度号 Graduation	允差等级 Error-tolerance level			
		I		II	
		允差值 Error-tolerance value	测温范围 ℃ Range of temperature measurement ℃	允差值 Error-tolerance value	测温范围 ℃ Range of temperature measurement ℃
WRN	K	±1.5℃	-40~+375	±2.5℃	-40~+333
		±0.004|t|	375~1000	±0.0075|t|	333~1200
WRE	E	±1.5℃	40~+375	±2.5℃	-40~+333
		±0.004|t|	375~800	±0.0075|t|	333~900
WRP	S	±1℃	0~+1100	±1.5℃	0~+600
		±[1+0.003(t-1100)]	1100~1600	±0.0025|t|	600~1600
WRQ	R	±1℃	0~+1100	±1.5℃	0-600
		±[1+0.003(t-1100)]	1100~1600	±0.0025|t|	600-1600
WRR	B	--	--	±0.0025|t|	--
		--	--	--	600~1700

热电阻 Thermal resistance

型号 Model	分度号 Graduation	测温范围 ℃ Range of temperature measurement ℃	精度等级 Precision grade	允许差值 Error-tolerance value
WZP	Pt100	A级 -30-300 B级 -50-500	A	±(0.15+0.002|t|)
			B	±(0.30+0.005|t|)
WZC	Cu50 Cu100	-50~+100	--	±(0.30+0.006|t|)

微型热电偶(阻) Miniature thermocouple (resistance)

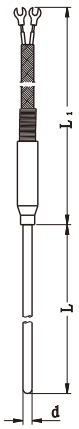

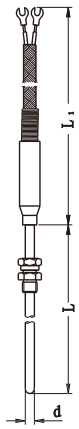

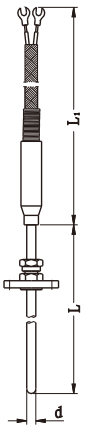

应用

适用于狭小场所的温度测量与控制。是纺织、绦纶等行业不可缺少的测量温装置。

Application

It is suitable for temperature measurement and control in a small place. It is an indispensable device for measuring temperature in textiles, polyester industries and so on.

主要技术参数

1.精度等级
热电偶: Ⅱ
热电阻：A,B

2.公称压力
常压

Main technical parameters

1.Standard for product implementation
Thermocouple: II
Thermal resistance: A,B

2.Nominal pressure
Atmospheric pressure

型号及规格 Model and specifications

型号 Model	分度号 Graduation	测温范围 ℃ Range of temperature measurement ℃	热响应时间 Thermal response time	保护管材料 Material for protective tube	规格 Specification
WRE-203S	E	-40~250	＜5S	1Cr18Ni9Ti	150 200 250 300 350 400 450
WRE-205S			＜8S		
WRE-206S			＜10S		
WZP-203S	Pt100	A级 −30-300 B级 −50-500	＜5S		
WZP-205S			＜8S		
WZP-206S			＜10S		

热电偶Ⅰ级，热电阻A级按协议订货

Thermocouple I and thermal resistance are ordered according to the agreement.

微细铠装热电偶 Micro sheath thermocouple

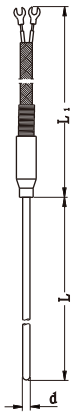

应用

适用于狭小且须弯曲场所的温度测量与控制。是化工、化纤、制药等行业不可缺少的测量温装置。

Application

It is suitable for temperature measurement and control in small and curved areas. It is a indispensable temperature-measuring device in chemical, chemical fiber, pharmaceutical and other industries.

主要技术参数

精度等级: Ⅰ级或Ⅱ级
公称直径:Φ1
弯曲半径:R≥5D
公称压力:常压

Main technical parameters

Precision grade: I or II
Nominal diameter:Φ1
Bending radius:R≥5D
Nominal pressure: atmospheric pressure

型号及规格 Model and specifications

型号 Model	分度号 Graduation	测温范围 ℃ Range of temperature measurement ℃	热响应时间 Thermal response time	保护管材料 Material for protective tube	规格 Specification
WRN-191S	K	0~600	<3S	1Cr18Ni9Ti	100×800 200×800 300×800 500×800 750×800
WRE-191S	E	0~400			

热电偶Ⅰ级按协议订货

Thermocouple I is ordered according to the agreement.

压簧固定热电偶 Fixed thermocouple by pressure spring

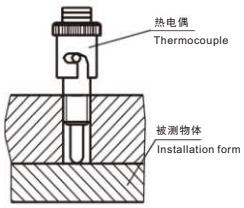

安装形式
Measured object

应用

采用弹性压紧装置,使测量端紧贴被测物表面,适用于塑料、轻纺及食品等行业测温。

Application

The measuring end is pressed against the surface of the measuring object by elastic pressing device. It is suitable for temperature measurement in plastic, textile and food industry.

主要技术参数

精度等级: Ⅰ级 Ⅱ级
热响应时间:≤5S

Main technical parameters

Precision grade: I and II
Thermal response time: ≤5S

型号及规格 Model and specifications

型号 Model	分度号 Graduation	测温范围 ℃ Range of temperature measurement ℃	保护管材料 Material for protective tube
WRET-01	E	0~250	1Cr18Ni9Ti

热电偶Ⅰ级按协议订货

Thermocouple I is ordered according to the agreement.

规格 specifications

总长 Total length	保护管长度 length of protective tube
1000	30
1500	30
2000	30
2500	30
3000	30
3500	30
4000	30
1000	60
1500	60
2000	60
2500	60
3000	60
3500	60
4000	60

插座式热电阻 Thermal resistance of socket type

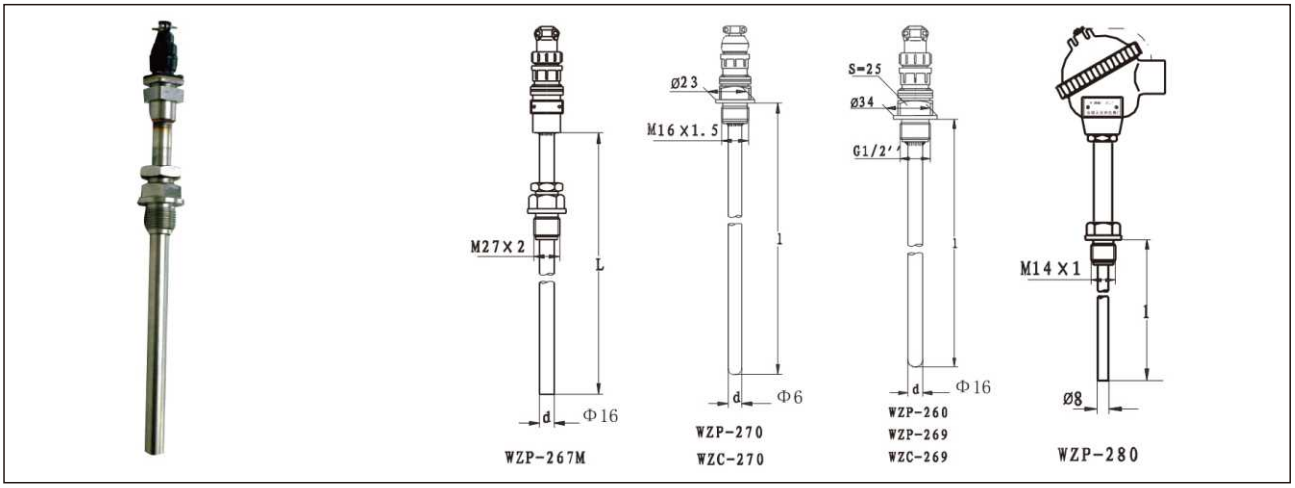

应用

采用接插件形式，安装方便。适用于测量-200~450℃范围内液体、气体及固体表面测温。

Application

The measuring end is pressed against the surface of the measuring object by elastic pressing device. It is suitable for temperature measurement in plastic, textile and food industry.

主要技术参数

精度等级：A,B
防护等级：IP65
公称压力：常压

Main technical parameters

Precision grade: A,B
Protection level：IP65
Nominal pressure: atmospheric pressure

型号及规格 Model and specifications

型号 Model	分度号 Graduation	测温范围 ℃ Range of temperature measurement ℃	热响应时间 Thermal response time	保护管材料 Material for protective tube	规格 Specification
WZP-260	Pt100	0~100	<30s	1Cr18Ni9Ti	100,150 200,250 300
WZP_2-260			<45s		
WZP-267M	Pt100	-50~150	<30s		
WZP-269	Pt100	A级 -30-300 B级 -50-500	<30s		75,100 150,200 250
WZP_2-269			<45s		
WZC-269	Cu50	-50~100	<120s		
WZP-270	Pt100	-200~420	<15s		50,75 100,150 200
WZC-270	Cu50	-50~150	45s		
WZP-280	Pt100	-200~300	<30s		

热电阻A级按协议订货

Therm resistance A is ordered according to the agreement.

直角弯头热电偶 The bend thermocouple with right angle

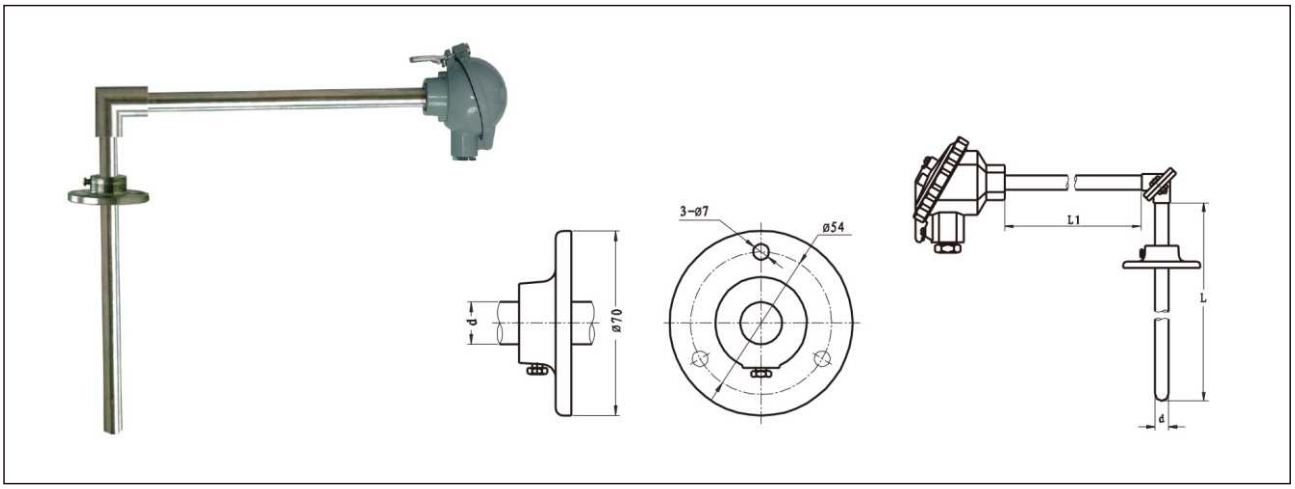

应用

适用于生产现场存在高温和有害气体对热电偶接线盒有影响，或不宜直接水平及垂直安装场合。

Application

It is applicable to the production site with high temperature and harmful gas which impact on the thermocouple junction box, or occasions where direct horizontal and vertical installation is not fitted.

主要技术参数

电气出口:M20x1.5, NPT1/2
精度等级:Ⅰ，Ⅱ
防护等级:IP65
公称压力:常压

Main technical parameters

Electrical outlet:M20x1.5, NPT1/2
Precision grade: Ⅰ， Ⅱ
Protection level:IP65
Nominal pressure: atmospheric pressure

型号及规格 Model and specifications

型号 Model	分度号 Graduation	测温范围 ℃ Range of temperature measurement ℃	热响应时间 Thermal response time	保护管材料 Material for protective tube	规格 Specification
WRN-530	K	0~800	≤90s	1Cr18Ni9T	300×150 350×200 400×250 450×300 500×500 600×450 650×500
WRN_2-530					
WRE-530	E	0~600			
WRE_2-530					
WRN-530	K	0~800			
WRN_2-530					
WRE-530	E	0~600			
WRE_2-530					

热电偶Ⅰ级按协议订货

High temperature thermocouple of precious metal

高温贵金属热电偶

High temperature thermocouple of precious metal

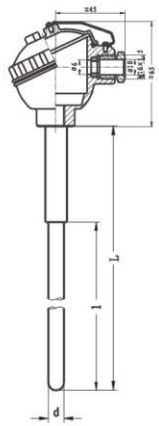

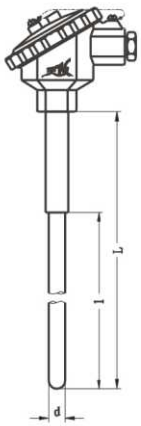

应用

适用于各种生产过程中高温场合，广泛应用于玻璃及陶瓷及工业盐浴炉等测温。

Application

It is applicable to the production site with high temperature and harmful gas which impact on the thermocouple junction box, or occasions where direct horizontal and vertical installation is not fitted.

主要技术参数

电气出口:M20x1.5, NPT1/2
精度等级: Ⅱ
防护等级:IP65
偶丝直径:F0.5
公称压力:常压

Main technical parameters

Electrical outlet:M20x1.5, NPT1/2
Precision grade: II
Protection level:IP65
Radium of thermocouple wire:F0.5
Nominal pressure: atmospheric pressure

型号及规格 Model and specifications

型号 Model	分度号 Graduation	测温范围 ℃ Range of temperature measurement ℃	热响应时间 Thermal response time	流速 Flow rate	规格 Specification	
					d	L×1
WRP-130 WRP_2-130	S	0~1300	＜150s	高铝质 High alumina	Φ16	300×150 350×200 400×250 450×300 500×350 550×400 650×500 900×750 1150×1000 1650×1500 2150×2000
WRP-131 WRP_2-131			＜360s		Φ25	
WRQ-130 WRQ_2-131	R	0~1300	＜150s		Φ16	
WRQ-130 WRQ_2-131			＜360s		Φ25	
WRR-130 WRR-131	B	0~1600	＜150s	刚玉质 Corundum	Φ16	
WRR_2-130 WRR_2-131			＜360s		Φ25	

热风炉热电偶 Thermocouple for hot blast stove

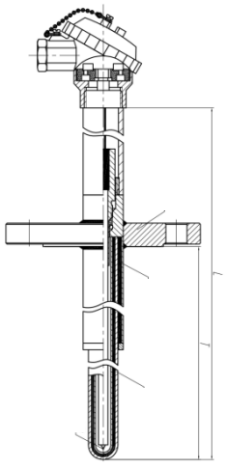

应用

适用于钢铁行业高炉热风炉送风管和炉顶等部位的温度测量，它具有耐高温、抗氧化性和还原性气体的双重腐蚀，耐气流冲刷。使用温度600-1600℃，外套管采用进口无压烧结碳化硅管，内衬双层优质刚玉管，多层保护。

Application

The temperature measurement for the steel industry blast furnace blast pipe and other parts of the roof, it has high temperature resistance, oxidation resistance and reducing gas corrosion, cavitation erosion. Using the temperature 600-1600 degrees Celsius, the outer sleeve pipe is made of imported non pressure sintered silicon carbide tube, the inner lining of the double layer of high quality corundum pipe, the multi-layer protection.

主要技术参数

IEC751
GB/T1598-2010

Main technical parameters

IEC751
GB/T1598-2010

型号及规格 Model and specifications

型 号 Model	分度号 Graduation	测温范围 ℃ Range of temperature measurement ℃	公称压力 Nominal pressure	保护管材料 Material for protective tube	规格 Specification
WRP-430RF	SB	0-1600℃	≤10MPa	碳化硅 silicon carbide	950*750

气化炉高温热电偶

High temperature thermocouple for gasification furnace

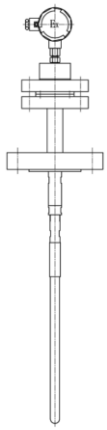

应用

适用于煤气化行业-气化炉炉膛。煤化工行业GE-TEXACO炉膛测温专用。其优点为当炉砖及衬里厚度发生改变时，热电偶可调节自身伸缩量，达到最佳测温位置。通过万向转球，限位导管，减震弹簧等及采用进口无压烧结碳化硅外保护管，内层缓热型内保护管，热电偶具有耐高温、高压、耐磨、耐热振、良好气密性、二级阻漏结构等诸多优点，是GE-TEXACO炉膛测温的专用高温热电偶。专利证书：ZL 2014 2 0622012.3

Application

It is applicable to the coal gasification industry- chamber of gasifier furnace. And it is specially used for temperature measurement in GE-TEXACO chamber of coal chemical industry. The utility model has the advantages that when the furnace brick and the thickness of the lining are changed, the thermocouple can adjust the amount of self-expansion to reach the optimum temperature measurement position. By adopting the universal rotating ball, limiting catheter, damping spring, imported sintered silicon carbide external protection tube, gradual-heat type protection tube as linear, the thermocouple has many advantages as resistance of high temperature, high pressure, abrasion resistance, heat resistance, good air tightness and secondary leakage preventing structure. It is the high temperature thermocouple used in chamber of GE-TEXACO furnace. Patent certificate is: ZL 2014 2 0622012.3.

主要技术参数

IEC751
GB/T1598-2010

Main technical parameters

IEC751
GB/T1598-2010

型号及规格　Model and specifications

型号 Model	分度号 Graduation	测温范围 Temperature-measuring range	公称压力 Nominal pressure	保护管材料 Protective tube material	规格 Specifications
WRP-430QH	S B	0-1600℃	≤10MPa	无压烧结碳化硅 Sintered silicon carbide	950*750

耐磨热电偶、耐磨热电阻

Wear-resistant thermocouple and thermal resistance

电厂专用耐磨热电偶
Wear-resistant thermocouple specially used for power plant

1、循环流化床锅炉专用：钨钴基耐磨合金锻棒φ16、φ18、φ20、φ22、φ25、φ28、φ30、φ32，H=300；
2、火力发电厂磨煤机、风粉专用；
3、火力发电厂烟道专用：保护管表面喷焊碳化钨（WC）或镍60（Ni60）。

1. Specially used for circulating fluidized bed boiler: tungsten cobalt base wear-resistant alloy forging rod: φ16、φ18、φ20、φ22、φ25、φ28、φ30、φ32，H=300.
2. Specially used for coal mill for wind powder plant and wind powder.
3. Specially used for flue pipe in thermal power plant: spray welding on the surface of protective tube by WC or Ni60.

石化专用耐磨热电偶
Wear-resistant thermocouple specially used for petrochemical industry

催化裂化、重整等石化装置常用：镍基高温合金表面堆焊司太立硬质合金。

Commonly used for catalytic cracking, reforming and other petrochemical equipment: nickel based high-temperature surfacing stellite alloy.

水泥厂专用耐磨热电偶
Wear-resistant thermocouple specially used for cement plant

水泥厂窑头窑尾：
在304，316,347等表面喷焊碳化钨（WC）或镍60（Ni60）耐磨合金锻棒，钴基、镍基、镍钴基、钨钴基。

Kiln head kiln tail for cement plant :
Spray and weld the WC or Ni60 on the surface of 304,316,347.
Wear-resistant alloy forging rod, cobalt base, nickel base, nickel cobalt base, tungsten cobalt base .

多点热电偶（阻） Multipoint thermocouple (resistance)

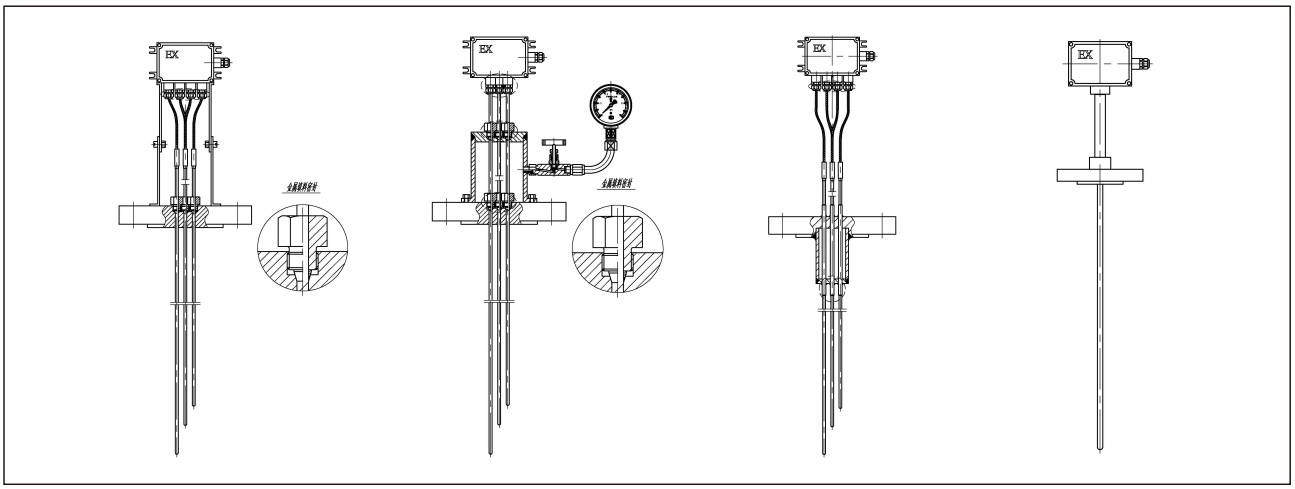

应用

多点热电偶（阻）适用于生产现场温度梯度不显著，同时需要测量多个位置或单个位置多出测量，产品广泛应用于合成塔、反应器、储罐等装置中。根据测温元件的结构可分为捆绑式、单点密封式、多点复合式等。专利证书：

Application

Multipoint thermocouple (resistance) is suitable for the production field with not obvious temperature gradient. At the same time, the personnel must measure one position or multiple position. The products are widely used in the synthesis tower, reactor, storage tank and other devices. According to the structure of the temperature measuring element, it can be divided into binding type, single point sealing type, multi-point composite type, etc. The patent certificate is:

型号 Model	分度号 Graduation	测温范围 Temperature-measuring range	公称压力 Nominal pressure	测温点数 Protective tube material	规格 Specifications
WRN-440DTR	K	0-1200℃	≤15MPa	2~40	实际需求设置 Set up according to the actual demand
WRN-440DTR	K	0-1200℃	≤15MPa	2~40	
WRN-440D	K	0-1200℃	≤15MPa	2~40	
WRN-440DTF	K	0-1200℃	≤15MPa	2~40	

备注：其它分度号按用户规格书执行。

Note: other graduations are implemented according to user specification.

硫磺回收吹气热电偶 Sulfur recovery blowing thermocouple

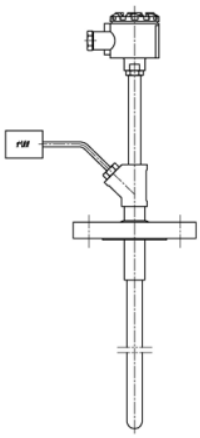

应用

吹气热电偶适用于硫磺回收等含浓度较高的炉子测温，通过外部伸入吹气管至保护管内部，将保护管内有毒有害有腐蚀的气体吹出，或使保护管内压力大于炉膛压力不会使有害物质侵入，从而提高使用寿命。

Application

The blowing thermocouple is applicable for temperature measurement in furnace containing high concentration of sulfur recovery and it is inserted into the protective tube through the external part to blow out the poisonous and corrosive gases in the protective pipe.

型号 Model	分度号 Graduation	测温范围 Temperature-measuring range	公称压力 Nominal pressure	测温点数 Protective tube material	规格 Specifications
WRP-440C WRQ-440C WRR-440C	S R B	0-1600℃	常压 Atmospheric pressure	亚微米级无压烧结碳化硅复合耐高温、耐冲刷保护管 Protection tube which is high temperature resistant and erosion resistant and compounded by sub-micron sintering silicon carbide	按实际需求设置 Set up according to the actual demand

双金属温度计 Bimetallic thermometer

应用

双金属温度计是一种测量中低温度的现场检测仪表。可以直接测量各种生产过程中的-80℃~+500℃范围内液体、蒸汽和气体介质温度。

工作原理

双金属温度计是基于绕制成环性弯曲状的双金属片组成。一端受热膨胀时，带动指针旋转，工作仪表便显示出热电势所应的温度值。

特点

1.现场显示温度，直观方便；
2.安全可靠，使用寿命长；
3.多种结构形式，可满足不同要求；

主要技术参数

1.产品执行标准:JB/T8803-1998；
2.标度盘公称直径：60,100,150；
3.精度等级：（1.0）,1.5；
4.热响应时间：≤40s；
5.防护等级：IP55；
6.角度调整误差；
角度调整误差应不超过其量程的1.0%；
7.回差:温度计回差应不大于基本误差限的绝对值；
8.重复性:温度计重复性极限范围切应不大于基本误差限绝对值的1/2；
9.测温范围

Application

Bimetallic thermometer is a kind of field testing instrument for measuring low and medium temperature. It can directly measure the temperature of the liquid, vapor and gas within -80℃~+500℃ in a variety of production processes.

Working principle

The bimetallic thermometer is made of a metal sheet which is made into a ring and bend shape. When one end is heated and expanded, it will lead to the rotation of the pointer and the working instrument will show the temperature value of the thermal electric potential.

Characteristics

1. It can display the temperature on-site, which is intuitive and convenient
2. It is safe and reliable with long service life;
3. With a variety of structural forms, which can meet different requirements

Main technical parameters

1.Product implementation standard:JB/T8803-1998
2.Nominal diameter of dial：60,100,150
3Precision grade：（1.0）,1.5
4.Thermal response time：≤40s
5.Protection level：IP55
6.Angle adjustment error
Angle adjustment error should not more than 10% of the range
7. Return difference: the return difference of the thermometer should not be more than the absolute value of the error limitation.
8. Repeatability: the repeatability of the thermometer should be no greater than 1/2 of the absolute value of the basic error limitation.
9. Range of temperature measurement

测温范围 ℃ Range of temperature measurement ℃	适应范围 Adaptive range	
	工业、商业 Industrial, commercial	实验室、小型 Industrial, commercial
-80~+40	√	√
-40~+80	√	√
0~50	√	√
0~100	√	√
0~150	√	√
0~200	√	√
0~300	√	√
0~400	√	√
0~500	√	√

10.正常工作大气条件

Condition of normal working atmospheric pressure

工作场所 Work place	温度(℃) Temperature (℃)	相对湿度 % Relative humidity %
掩蔽场所 Sheltered place	-25~+25	5~100
户外场所 Outdoor place	-40~+85	5~100

11.测量端形式 Form in the measuring end

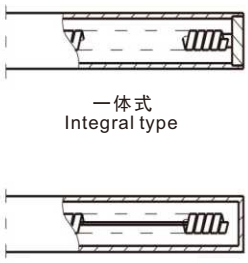

一体式
Integral type

抽芯式
Core-pulling type

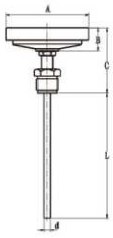

轴向型
Axial type

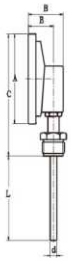

径向型
Radial type

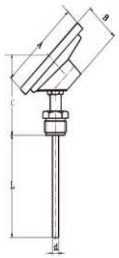

135°向型
135°type

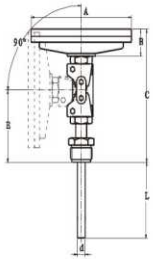

万向型
Universal type

12.外形尺寸 Outline dimension

形式 Forms	A	B	C	E	L	D
轴向型 Axial type	65	23	73	-	75 100 150 200 300 400 500 750 1000	Φ6 Φ8 Φ10
	105	23	73	-		
	155	23	73	-		
径向型 Radial type	65	50	110	34		
	105	50	110	34		
	155	50	110	34		
1355°向型 1355°type	105	23	85	-		
	155	23	85	-		
万向型 Universal type	105	23	178	120		
	155	23	178	120		

安装固定形式 Installation and fixation form

可动外螺纹管接头 Joint of active external screw thread pipe

M	H	SW	
M16×1.5	12	18	Φ6 Φ8 Φ10
M20×1.5	16	22	
M27×2	20	30	
NPT1/4	15	18	
NPT1/2	19	22	
NPT3/4	25	30	

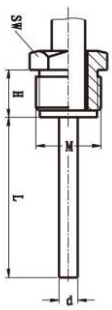

可动内螺纹管接头 Joint of active internal screw thread pipe

M	H	SW	
M16×1.5	12	18	Φ6 Φ8 Φ10
M20×1.5	16	22	
M27×2	20	30	
NPT1/4	15	18	
NPT1/2	19	22	
NPT3/4	25	30	

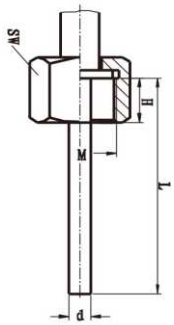

固定螺纹接头 Fixed screw thread joint

M	H	SW	
M16×1.5	12	18	Φ6 Φ8 Φ10
M20×1.5	16	22	
M27×2	20	30	
NPT1/4	15	18	
NPT1/2	19	22	
NPT3/4	25	30	

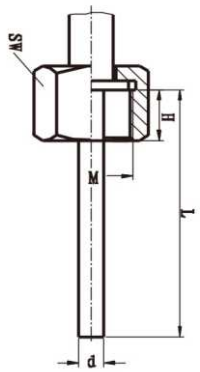

卡套螺纹接头 Sleeve screw thread joint

M	H	SW	d
M12×1.5	15	19	Φ6
M16×1.5	15	22	Φ8
M20×1.5	16	24	Φ10

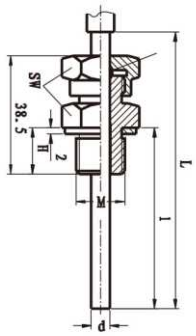

卡套法兰接头 Sleeve flange joint

D	D_1	D_2	SW	d_0	d
Φ6	Φ42	Φ24	Φ22	Φ9	Φ8 Φ10

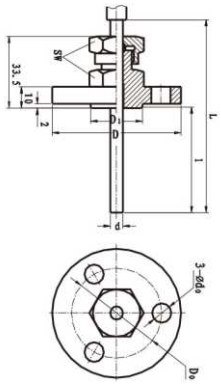

固定法兰 Fixed flange

D	D_1	D_2	SW	d_0	d
Φ105	Φ75	Φ5	Φ162	Φ14	Φ8 Φ10

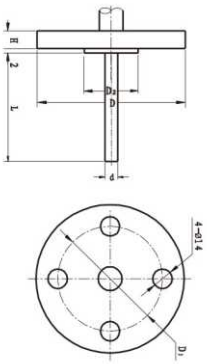

注：可提供ANSI、JB、HG等标准法兰
Note: ANSI, JB, HG and other standard flanges can be provided

型号命名方法 Naming method if models

W 温度仪表 Temperature instrument

S 金属膨胀式 Metal expansion

S 感温元件双金属片 Temperature sensitive element- bimetallic sheet

表壳公称直径 The nominal diameter of shell

3	60
4	100
5	150

位置特征 Position characteristics

0 轴向	0 Axial
1 径向	1 Radial
2 135°向	2 135°type
8 万向	8 Universal type

安装固定装置 Installation and fixation mode

0	无固定装置 Non-fixing device
1	可动外螺纹 Active external thread
2	可动内螺纹 Active internal thread
3	固定螺纹 Fixed screw thread
4	固定法兰 Fixed flange
5	卡套螺纹 Sleeve screw thread
6	卡套法兰 Sleeve flange

防护形式 Installation and fixation mode

无（未标注）	普通型
W	防护型
F	防腐型

W S S 4 8 1 W

典型型号示例 Examples of typical model

型号及规格 Model and specifications

轴向型 **Axial type**

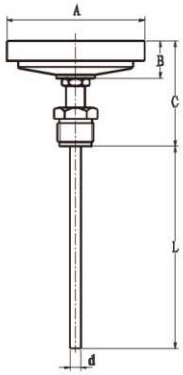

型号 Model	测温范围 ℃ Range of temperature measurement ℃	精度等级 Graduation	保护管材料 Material for protective tube	规格 Specification		安装固定装置 Installed with fixed device
				D	L	
WSS-300	-80~+40 -80~+40 0~+80 0~100 0~150 0~200 0~400 0~500	1.5	1Cr18NI9Ti 304 316 316L 哈氏C-276 Harrington C-276	Φ60	75 100 150 200 300 400 500 750 1000	无固定装置 Non-fixing device
WSS-400				Φ100		
WSS-500				Φ150		
WSS-301				Φ60		可动外螺纹 Movable external thread
WSS-401				Φ100		
WSS-501				Φ150		
WSS-302				Φ60		可动内螺纹 Movable internal thread
WSS-402				Φ100		
WSS-502				Φ150		
WSS-303				Φ60		固定螺纹 Fixed screw thread
WSS-403				Φ100		
WSS-503				Φ150		
WSS-304				Φ60		固定法兰 Fixed flange
WSS-404				Φ100		
WSS-504				Φ150		
WSS-305				Φ60		卡套螺纹 Sleeve screw thread
WSS-405				Φ100		
WSS-505				Φ150		
WSS-306				Φ60		卡套法兰 Sleeve flange
WSS-406				Φ100		
WSS-506				Φ150		

径向型 Radial type

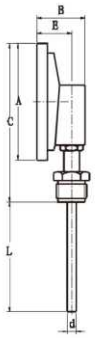

型号 Model	测温范围 ℃ Range of temperature measurement ℃	精度等级 Graduation	保护管材料 Material for protective tube	规格 Specification		安装固定装置 Installed with fixed device
				D	L	
WSS-310	-80~+40 -80~+40 0~+80 0~100 0~150 0~200 0~400 0~500	1.5	1Cr18NI9Ti 304 316 316L 哈氏C-276 Harrington C-276	Φ60	75 100 150 200 300 400 500 750 1000	无固定装置 Non-fixing device
WSS-410				Φ100		
WSS-510				Φ150		
WSS-311				Φ60		可动外螺纹 Movable external thread
WSS-411				Φ100		
WSS-511				Φ150		
WSS-312				Φ60		可动内螺纹 Movable internal thread
WSS-412				Φ100		
WSS-512				Φ150		
WSS-313				Φ60		固定螺纹 Fixed screw thread
WSS-413				Φ100		
WSS-513				Φ150		
WSS-314				Φ60		固定法兰 Fixed flange
WSS-414				Φ100		
WSS-514				Φ150		
WSS-315				Φ60		卡套螺纹 Sleeve screw thread
WSS-415				Φ100		
WSS-515				Φ150		
WSS-316				Φ60		卡套法兰 Sleeve flange
WSS-416				Φ100		
WSS-516				Φ150		

135° 向型　　135°type

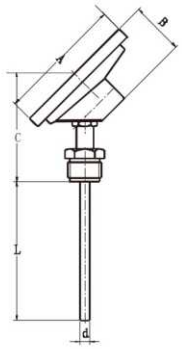

型号 Model	测温范围 ℃ Range of temperature measurement ℃	精度等级 Graduation	保护管材料 Material for protective tube	规格 Specification		安装固定装置 Installed with fixed device
				D	L	
WSS-420	-80~+40 -80~+40 0~+80 0~100 0~150 0~200 0~400 0~500	1.5	1Cr18NI9Ti 304 316 316L 哈氏C-276 Harrington C-276	Φ100	75 100 150 200 300 400 500 750 1000	无固定装置 Non-fixing device
WSS-520				Φ150		
WSS-421				Φ100		可动外螺纹 Movable external thread
WSS-521				Φ150		
WSS-422				Φ100		可动内螺纹 Movable internal thread
WSS-522				Φ150		
WSS-432				Φ100		固定螺纹 Fixed screw thread
WSS-532				Φ150		
WSS-424				Φ100		固定法兰 Fixed flange
WSS-524				Φ150		
WSS-425				Φ100		卡套螺纹 Sleeve screw thread
WSS-525				Φ150		
WSS-426				Φ100		卡套法兰 Sleeve flange
WSS-526				Φ150		

万向型 Universal type

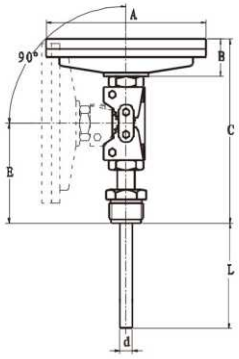

型号 Model	测温范围 ℃ Range of temperature measurement ℃	精度等级 Graduation	保护管材料 Material for protective tube	规格 Specification		安装固定装置 Installed with fixed device
				D	L	
WSS-480	-80~+40 -80~+40 0~+80 0~100 0~150 0~200 0~400 0~500	1.5	1Cr18NI9Ti 304 316 316L 哈氏C-276 Harrington C-276	Φ100	75 100 150 200 300 400 500 750 1000	无固定装置 Non-fixing device
WSS-580				Φ150		
WSS-481				Φ100		可动外螺纹 Movable external thread
WSS-581				Φ150		
WSS-482				Φ100		可动内螺纹 Movable internal thread
WSS-582				Φ150		
WSS-483				Φ100		固定螺纹 Fixed screw thread
WSS-583				Φ150		
WSS-484				Φ100		固定法兰 Fixed flange
WSS-584				Φ150		
WSS-485				Φ100		卡套螺纹 Sleeve screw thread
WSS-585				Φ150		
WSS-486				Φ100		卡套法兰 Sleeve flange
WSS-586				Φ150		

安装形式 Installation form

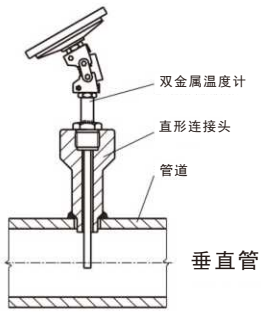

垂直管道安装方法

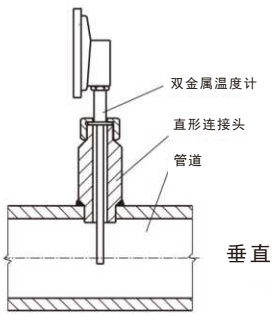

垂直管道安装方法

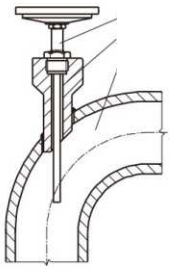

弯曲管道安装方法

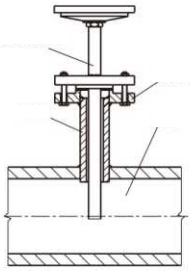

法兰安装方法

直形连接头规格 Specification for straight connection head

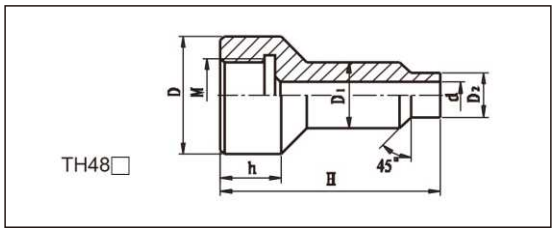

型号Code	M	D	D1	D2	d	h	H
TH48A	M16×1.5	Φ36	Φ18	Φ14	Φ7	27	80
TH48B	M20×1.5	Φ40	Φ18	Φ14	Φ7	27	60
TH48C	M27×2	Φ47	Φ28	Φ22	Φ17	32	60
TH48D	M33×2	Φ55	Φ36	Φ30	Φ21	34	120
TH48E	NPT1/2	Φ39	Φ27	Φ21	Φ16	35	60
TH48F	NPT3/4	Φ47	Φ31	Φ25	Φ20	40	
TH48G	GNPT1	Φ47	Φ41	Φ35	Φ30	45	120

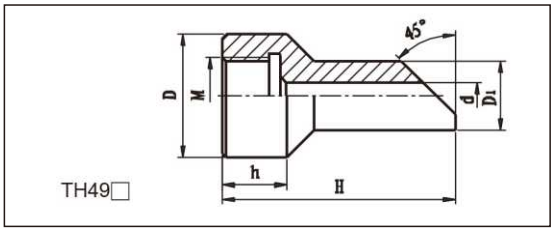

型号Code	M	D	D1	D2	d	h	H
TH48A	M16×1.5	Φ36	Φ18	Φ14	Φ7	27	80
TH48B	M20×1.5	Φ40	Φ18	Φ14	Φ7	27	60
TH48C	M27×2	Φ47	Φ28	Φ22	Φ17	32	60
TH48D	M33×2	Φ55	Φ36	Φ30	Φ21	34	120
TH48E	NPT1/2	Φ39	Φ27	Φ21	Φ16	35	60
TH48F	NPT3/4	Φ47	Φ31	Φ25	Φ20	40	
TH48G	GNPT1	Φ47	Φ41	Φ35	Φ30	45	120

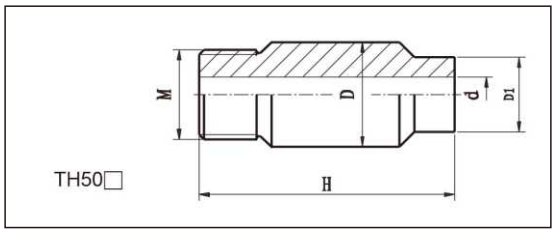

型号Code	M	D	D1	D2	d	h	H
TH48A	M16×1.5	Φ36	Φ18	Φ14	Φ7	27	80
TH48B	M20×1.5	Φ40	Φ18	Φ14	Φ7	27	60
TH48C	M27×2	Φ47	Φ28	Φ22	Φ17	32	60
TH48D	M33×2	Φ55	Φ36	Φ30	Φ21	34	120
TH48E	NPT1/2	Φ39	Φ27	Φ21	Φ16	35	60
TH48F	NPT3/4	Φ47	Φ31	Φ25	Φ20	40	
TH48G	GNPT1	Φ47	Φ41	Φ35	Φ30	45	120

选型须知

1）型号　　2）表盘直径
3）精度等级　　4）安装固定形式
5）测温范围　　6）长度或插入深度

例A:万向型, 表盘直径100, 测温范围0~400℃,1.5级 活动外螺纹M27×2, 长度450mm, WSS-481　0~400℃ L=450　M27×2

Selection notice

1) Model
2) Dial diameter
3) Precision grade
4) Installation and fixation form
5) Range of temperature measurement
6) Length or depth of insertion

Example A: Universal type, dial diameter 100, temperature measurement range 0~400℃, 1.5 external screw thread M27 * 2, length 450mm, WSS-481　0~400℃ L=450　M27×2

电接点双金属温度计

Bimetallic thermometer of electric contact point

应用

电接点双金属温度计应用于生产现场对温度需自动控制和报警。直接测量各种生产过程中的-80℃~+500℃范围内体、蒸汽和气体介质温度。

Application

Bimetallic thermometer of electric contact point is suitable for the production field where automatic control and alarming for temperature are required. It can directly measure the temperature of the liquid, vapor and gas within -80℃~+500℃in a variety of production processes.

工作原理

电接点双金属温度计是利用温度变化时带动触点变化当其与上下限触点接触或断开的同时,使电路中的继电器动作,从而自动控制及报警。

Working principle

Bimetallic thermometer of electric contact point adopts the principle that when temperature changes, the contact points will also change correspondingly. When the upper and lower contact points connect or disconnect, the relay in the circuit will take actions so as to realize automatic control and alarming.

特点

1.现场显示温度,直观方便;
2.具有自动切断电源和报警功能;
3.安全可靠,使用寿命长;
4.多种结构形式,可满足不同要求。

Characteristics

1. Display the temperature on site, which is intuitive and convenient;
2.With automatic power-cutting and alarming functions
3. Safe and reliable with long service life;
4. A variety of structural forms, which can meet different requirements;

主要技术参数

产品执行标准
JB/T8803-2015
Gb3836
标度盘公称直径：100
精度等级：（1.0）,1.5
热响应时间：≤40s
防护等级：IP55

Main technical parameters

Product implementation standard
JB/T8803-2015
Gb3836
Nominal diameter of dial：100
Precision grade：（1.0）,1.5
Thermal response time：≤40s
Protection level：IP55

电气参数 Electrical parameters

额定功率VA Rated power VA	最高工作电压V Maximum operating voltage V	最大允许电流 Maximum allowable current
10	220	0. 7A
	24	

绝缘电阻 Insulation resistance

额定电压 Rated voltage	直流试验电压 DC test voltage	绝缘电阻 Insulation resistance
7	24d.c	100
20	220a.c	500

1.正常工作大气条件
温度-25~+55℃相对湿度≤85%。

2.设定点误差
设定点误差应不超过基本误差限的1.5倍切换差
切换差应不超过基本误差限的1.5倍。

3.切换重复性
切换重复性极限范围不大于基本误差限绝对值1/2
型号命名方法。

1.Normal working atmospheric pressure
The temperature is: -25~+55℃ and the relative humidity is ≤85%.

2.Error in the set point
Error in the set point should not more than 1.5 times of switching difference of basic error limitation.
Switching difference should not exceed 1.5 times of the basic error limitation.

3.Switching repeatability
The limitation of the switching repeatability is not greater than 1/2 of the absolute value of the basic error limitation.

型号命名方法 Model naming method

W 温度仪表 Temperature instrument

S 金属膨胀式 Metal expansion

S 感温元件双金属片 Temperature-sensing element-bimetallic sheet

X 电接点结构 Structure of electric contact points

表壳公称直径 The nominal diameter of shell

4 100

位置特征 Position characteristics

0 轴向(直型) Axial (straight)
1 径向(角型) Radial (angle type)
8 万向（可调角型）Universal type (adjustable angle type)

安装固定装置 Installation and fixation mode

0 无固定装置 Non-fixing device
1 可动外螺纹 Active external thread
2 可动内螺纹 Active internal thread
3 固定螺纹 Fixed screw thread
4 固定法兰 Fixed flange
5 卡套螺纹 Sleeve screw thread
6 卡套法兰 Sleeve flange

电接点位式调节 Position regulation of electric contact points

M（未标注）	上下限 Upper and lower limitation
W	双上限 Double upper limitations
F	双下限 Double lower limitations

W	S	S	X	4	8	1	W	典型型号示例 Examples of typical model

型号及规格 Model and specifications

型号 Model	测温范围 ℃ Range of temperature measurement ℃	精度等级 Graduation	保护管材料 Material for protective tube	规格 Specification L	安装固定装置 Installed with fixed device
WSSX-400	-80~+40 -80~+40 0~+80 0~100 0~150 0~200 0~400 0~500	1.5	1Cr18NI9Ti 304 316 316L 哈氏C-276 Harrington C-276	75 100 150 200 300 400 500 750 1000	无固定装置 Non-fixing device
WSSX-410					
WSSX-480					
WSSX-401					可动外螺纹 Movable external thread
WSSX-411					
WSSX-481					
WSSX-402					可动内螺纹 Movable internal thread
WSSX-412					
WSSX-482					
WSSX-403					固定螺纹 Fixed screw thread
WSSX-413					
WSSX-483					
WSSX-404					固定法兰 Fixed flange
WSSX-414					
WSSX-484					
WSSX-405					卡套螺纹 Sleeve screw thread
WSSX-415					
WSSX-485					
WSSX-406					卡套法兰 Sleeve flange
WSSX-416					
WSSX-486					

注：特殊形式可根据协议订货

Note: special forms can be ordered according to the agreement

电接点接线方式 Connection mode of electric contact points

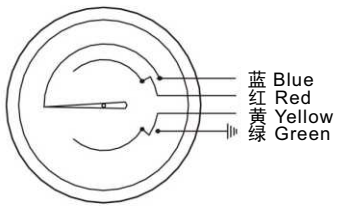

防爆电接点双金属温度计

Explosion proof electric contact bimetallic thermometer

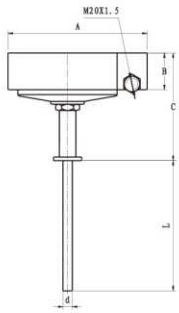

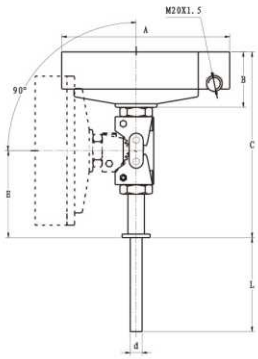

应用

双金属温度计可以直接测量生产现场存在碳氢化合物等爆炸物各过程中的-80℃~+500℃范围内体、蒸汽和气体介质以及固体表面测温。

Application

It is able to directly measure the temperature of liquid, steam and gas and solid surface in the production field where there are explosives such as hydrocarbons within the range of -80℃~+500℃.

主要技术参数

标度盘公称直径：100
热响应时间：≤40s
隔爆等级：dⅡBT4
额定功率：10VA
最高工作电压：220V
最高工作电流：0.7A

Main technical parameters

Main technical parameters
Nominal diameter of dial：100
Thermal response time：≤40s
Explosion proof grade：dⅡBT4
Rated power：10VA
Maximum operating voltage：220V
Maximum operating current：0.7A

外形及尺寸 Shape and dimension

形式 Type	D	A	B	E	d
电接点轴向型 Axial type pf electric contact points	130	65	190		Φ8
电接点万向型 Universal type pf electric contact points	130	60	215	110	Φ10

型号及规格 Model and specifications

型号 Model	测温范围 ℃ Range of temperature measurement ℃	精度等级 Graduation	保护管材料 Material for protective tube	规格 Specification L	安装固定装置 Installed with fixed device
WSSX-410B	-80~+40 -80~+40 0~+80 0~100 0~150 0~200 0~400 0~500	1.5	1Cr18NI9Ti 304 316 316L 哈氏C-276 Harrington C-276	75 100 150 200 300 400 500 750 1000	无固定装置 Non-fixing device
WSSX-480B					
WSSX-411B					可动外螺纹 Movable external thread
WSSX-481B					
WSSX-412B					可动内螺纹 Movable internal thread
WSSX-482B					
WSSX-413B					固定螺纹 Fixed screw thread
WSSX-483B					
WSSX-414B					固定法兰 Fixed flange
WSSX-484B					
WSSX-415B					卡套螺纹 Sleeve screw thread
WSSX-485B					
WSSX-416B					卡套法兰 Sleeve flange
WSSX-486B					

注:特殊形式可根据协议订货

Note: special forms can be ordered according to the agreement

选型须知

1) 型号
2) 精度等级
3) 测温范围
4) 电接点位式调节
5) 安装固定形式
6) 插入长度

例 A :隔爆型万向式双金属温度计,位式调节上下限,测温范围 0~400℃,保护管316,插入长度300mm.WSSX-481BM 0~400℃ 1=300 保护管316。

Notice for model selection

1) Model
2) Precision grade
3) Range of temperature measurement
4) Position regulation of electric contact points
5) Installation and fixation form
6) Insertion length

Example A: Bimetallic thermometer of explosion type and universal type, the upper and lower limitations of the position can be regulated, temperature measurement range 0~400℃, protective tube 316, insertion length 300mm. WSSX-481BM 0~400℃ 1=300, protective tube protective tube.

带远传双金属温度计

With remote double metal thermometer

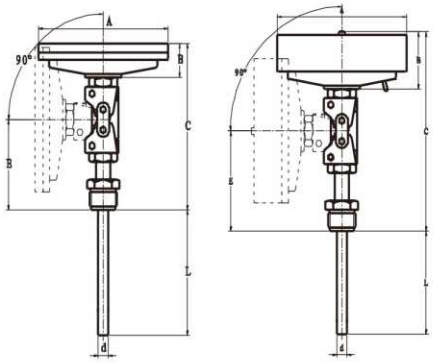

应用

采用双金属温度计与热电偶(阻)一体的方式，既满足现场测温需求，亦满足远距离传输需求。可以直接测量各种生产过程中的-80℃~+500℃范围内液体、蒸汽和气体介质以及固体表面测温。

Application

It is the integration of BI metal thermometer and thermocouple (resistance), which can not only meet the needs of the temperature measurement in field, but also meet the demand for long-distance transmission. It is able to directly measure the temperature of liquid, steam and gas and solid surface within the range of -80℃~+500℃.

主要技术参数

1.标度盘公称直径:100,150
2.热响应时间:≤40s
3.精度等级:（1.0）,1.5
4.热电偶;I级,1.5℃；Ⅱ级，2.5℃
5.热电阻:A级,±(0.15+0.005 ltl) B级，±(0.30+0.005 ltl)
6.防护等级：IP55

Main technical parameters

1.Nominal diameter of dial:100,150
2.Thermal response time:≤40s
3.Precision grade:（1.0）,1.5
4.Thermocouple; I , 1.5℃; II, 2.5℃
5. Thermal resistance: A, + (0.15+0.005 ltl)
B, ±(0.30+0.005 ltl)
6. Protection level：IP55

外形及尺寸 Shape and dimension

形式 Forms	D	A	B	E	d
径向型 Radial type	105	23	73		Φ10 Φ12 Φ14
	155	23	73		
轴向型 Axial type	65	50	110	34	
	105	50	110	34	
万向型 Universal type	105	23	178	120	
	155	23	178	120	
电接点轴向型 Axial type for the electric contact points	105	40	135		
电接点径向型 Radial type for the electric contact points	105	72	150	42	
电接点万向型D Universal D type for the electric contact points	105	40	175	98	

型号及规格 Model and specifications

型号 Model	分度号 Graduation	测温范围 ℃ Range of temperature measurement ℃	精度等级 Precision grade	保护管材料 Material for protective tube	插入长度 Insertion length
WSSE-401	E	-80~+40 -80~+40 0~+80 0~100 0~150 0~200 0~400 0~500	1.5	1Cr18NI9Ti 304 316 316L 哈氏C-276 Harrington C-276	100 150 200 300 400 500 750 1000
WSSE-501					
WSSE-411					
WSSE-511					
WSSE-481					
WSSE-581					
WSSP-501	Pt100				
WSSP-411					
WSSP-511					
WSSP-481					
WSSP-581					
WSSXE-401	E				
WSSXP-401	Pt100				
WSSXE-411	E				
WSSXP-411	Pt100				
WSSXE-481	E				
WSSXP-481	Pt100				

注

1) 热电偶I级、热电阻A级按协议订货；

2) 保护管其余材质根据协议订货。

Note

1) thermocouple I and thermal resistance A are ordered according to the agreement.

2)The other material for protective tube is ordered according to the agreement.

选型须知

1）型号
2）热电偶(阻)分度号
3）热电偶(阻)精度等级
4）双金属温度计精度等级
5）测温范围
6）安装固定形式
7）保护管材质
8）长度或插入长度

例A：带热电偶双金属温度计，轴向型，E型，I级，测温范围0~400℃，活动螺纹M27×2，保护管316，插入长度300mm. WSSE-401 0~400℃ I=300 I级 保护管316

Notice for model selection

1) Model
2) Graduation of thermocouple (resistance)
3) Precision grade of thermocouple (resistance)
4) Precision grade of bimetallic thermometer
5) Range of temperature measurement
6) Installation and fixation form
7) Material of the protective tube
8) Length or insertion length

Example A: Bimetallic thermometer with thermocouple axial type, model E and grade I, temperature measurement range 0~400℃, active screw thread M27×2, protective tube 316, insertion length 300mm. WSSE-401 0~400℃ I=300 I grade protective tube 316

热安装套管 Thermal mounting sleeve

应用

与两节式热电偶(阻)和双金属温度计配套使用，保护热电偶(阻)和双金属温度计正常工作。且可用于高压高流速场合。

Application

It is used along with the double-section thermocouple (resistance) and bimetallic thermometer so as to protect the thermocouple (resistance)for normal use.

主要技术参数

公称压力:

一般是指在常温下，保护管所能承受的静态外压而不破裂。允许工作压力不仅与保护管材料、直径、壁厚有关，且与其结构形式、安装方法及被测介质的流速、种类有关。

Main technical parameters

Nominal pressure:

It generally refers to the static pressure bear by the protective tube in room temperature. The allowed working pressure is not only related to the material of protective tube, diameter and wall thickness, but also with the structure, the installation method and the flow rate and the type of the measured medium.

外型及尺寸
Shape and dimension

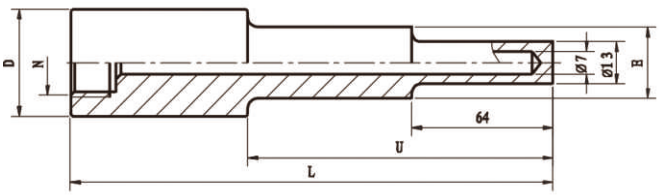

U(mm)	介质流速(m/s) Flow velocity of medium (m/s)	公称压力(P600)MPa Nominal pressure (P600) MPa
≤250	≤80	≤38

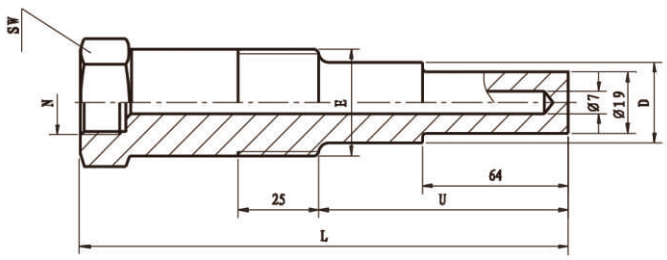

U(mm)	介质流速(m/s) Flow velocity of medium (m/s)	公称压力(P600)MPa Nominal pressure (P600) MPa
≤360	10	≤5

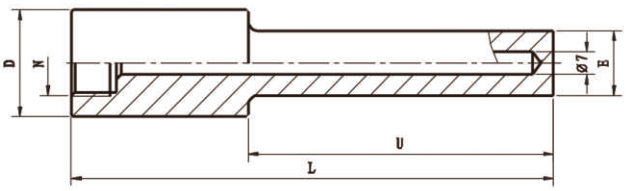

U(mm)	介质流速(m/s) Flow velocity of medium (m/s)	公称压力(P600)MPa Nominal pressure (P600) MPa
≤260	≤80	≤38

型号 Code	N	E	D	SW	U	L
TH03A	M20×1.5 (NPT1/2)	Φ19	Φ26.5	-	95 145 195 245 345 445 545	150 200 250 300 400 500 600
TH03B	M20×1.5 (NPT1/2)	Φ22	Φ33.5	34		
TH01A	M20×1.5 (NPT1/2)	NPT1	Φ25.4	-	60 110 160 210 260 360	150 200 250 300 400 500
TH01B	M20×1.5 (NPT1/2)	NPT3/4	Φ22.2	-		
TH03C	M20×1.5 (NPT1/2)	Φ28	Φ36	-	95 145 195 245 345 445 545	150 200 250 300 400 500 600
TH03D	M20×1.5 (NPT1/2)	Φ36	Φ41.5	-		

外型及尺寸 Shape and dimension	型号 Code	N	E	D	SW	U	L
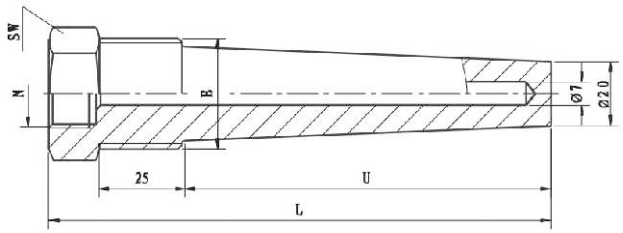 	TH01E	M20×1.5 (NPT1/2)	NPT3/4	–	34	60 85 110 160 210 260 360	100 125 150 200 250 300 400
	TH01F	M20×1.5 (NPT1/2)	NPT1	–			
U(mm) / 介质流速(m/s) Flow velocity of medium (m/s) / 公称压力(P600)MPa Nominal pressure (P600) MPa ≤260 / ≤10 / ≤5							
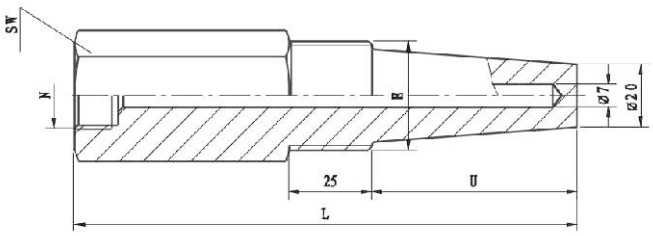 	TH01G	M20×1.5 (NPT1/2)	NPT3/4	–	34	60 110 160 210 260 360	150 200 250 300 400 500
	TH01H	M20×1.5 (NPT1/2)	NPT1	–			
U(mm) / 介质流速(m/s) Flow velocity of medium (m/s) / 公称压力(P600)MPa Nominal pressure (P600) MPa ≤260 / ≤10 / ≤5							
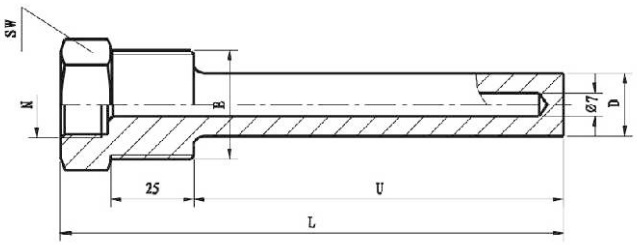 	TH01J	M20×1.5 (NPT1/2)	NPT3/4	Φ28	34	60 85 110 160 210 260 360	100 125 150 200 250 300 400
	TH01K	M20×1.5 (NPT1/2)	NPT1	Φ22			
U(mm) / 介质流速(m/s) Flow velocity of medium (m/s) / 公称压力(P600)MPa Nominal pressure (P600) MPa ≤260 / ≤10 / ≤5							
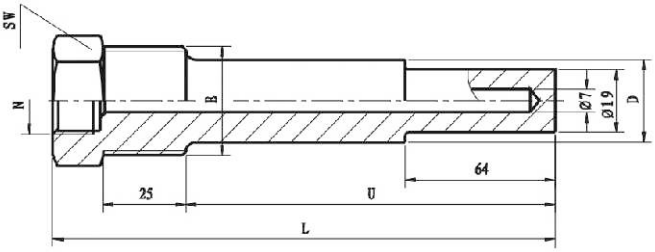 	TH01L	M20×1.5 (NPT1/2)	NPT1	Φ22.2	34	110 160 210 260 360 460 560	150 200 250 300 400 500 600
	TH01M	M20×1.5 (NPT1/2)	NPT3/4	Φ19			
U(mm) / 介质流速(m/s) Flow velocity of medium (m/s) / 公称压力(P600)MPa Nominal pressure (P600) MPa ≤260 / ≤10 / ≤5							

外型及尺寸 Shape and dimension	型号 Code	N	E	D	SW	U	L
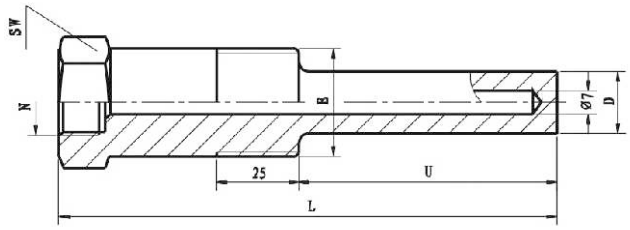	TH01N	M20×1.5 (NPT1/2)	NPT1	Φ22	34	60 110 160 210 260 360	150 200 250 300 400 500
U(mm): ≤260 — 介质流速(m/s) Flow velocity of medium (m/s): 10 — 公称压力(P600)MPa Nominal pressure (P600) MPa: ≤5							
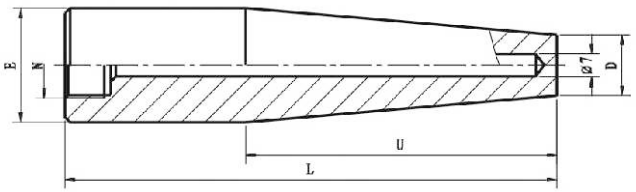	TH03E	M20×1.5 (NPT1/2)	Φ38	Φ13	-	100	250
	TH03F	M20×1.5 (NPT1/2)	Φ38	Φ20	-		300
U(mm): ≤260 — 介质流速(m/s) Flow velocity of medium (m/s): ≤80 — 公称压力(P600)MPa Nominal pressure (P600) MPa: ≤38							
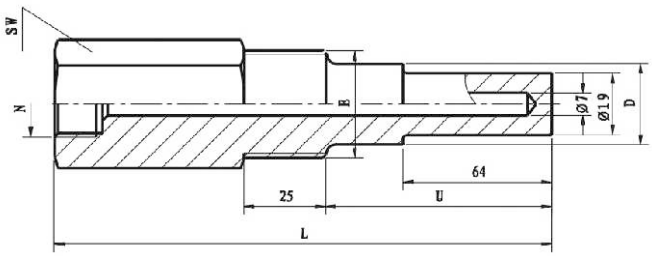	TH01P	M20×1.5 (NPT1/2)	NPT1	Φ22	34	160 210 260 360	250 300 400 500
	TH01Q	M20×1.5 (NPT1/2)	NPT3/4	Φ19			
U(mm): ≤260 — 介质流速(m/s) Flow velocity of medium (m/s): 10 — 公称压力(P600)MPa Nominal pressure (P600) MPa: ≤5							
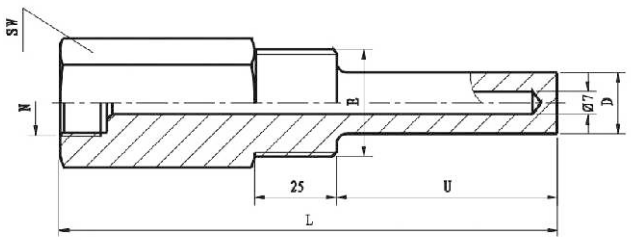	TH01R	M20×1.5 (NPT1/2)	NPT1	Φ22	34	60 110 160 210 260 360	150 200 250 300 400 500
	TH01S	M20×1.5 (NPT1/2)	NPT3/4	Φ19			
U(mm): ≤260 — 介质流速(m/s) Flow velocity of medium (m/s): 10 — 公称压力(P600)MPa Nominal pressure (P600) MPa: ≤5							

外型及尺寸 Shape and dimension	型号 Code	N	E	D	SW	U	L
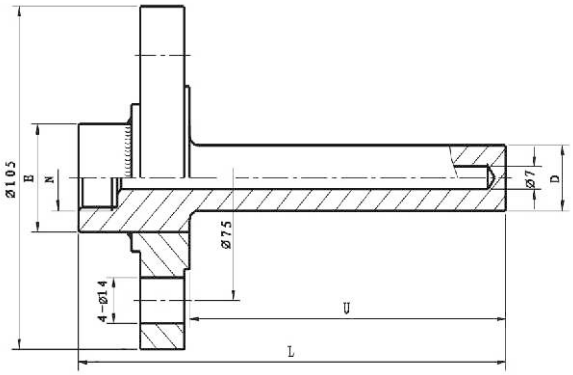 U(mm) / 介质流速(m/s) Flow velocity of medium (m/s) / 公称压力(P600)MPa Nominal pressure (P600) MPa ≤260 / 50 / ≤38	TH02E	M20×1.5 (NPT1/2)	Φ41.5	Φ36	-	95 145 195 245 345 445 545	150 200 250 300 400 500 600
	TH02F	M20×1.5 (NPT1/2)	Φ38	Φ28	-		
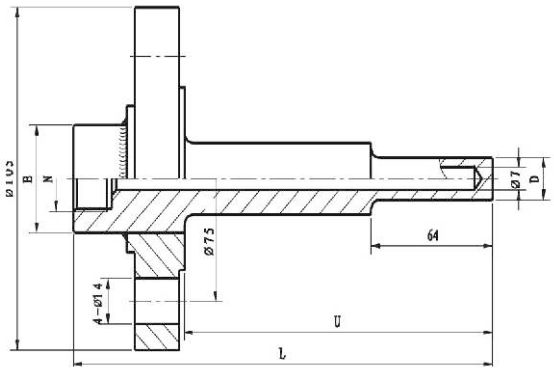 U(mm) / 介质流速(m/s) Flow velocity of medium (m/s) / 公称压力(P600)MPa Nominal pressure (P600) MPa ≤260 / 50 / ≤38	TH03G	M20×1.5 (NPT1/2)	Φ19	Φ26.5	-	95 145 195 245 345 445 545	150 200 250 300 400 500 600
		M20×1.5 (NPT1/2)	Φ22	Φ33.5			
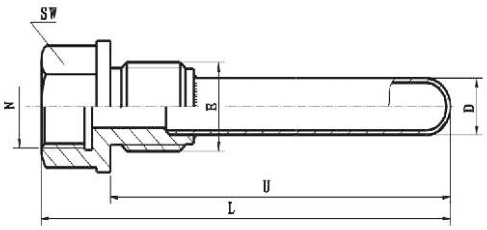 U(mm) / 介质流速(m/s) Flow velocity of medium (m/s) / 公称压力(P600)MPa Nominal pressure (P600) MPa ≤260 / 10 / ≤5	TH03H	M20×1.5 (NPT1/2)	M27×2	Φ16	-	95 145 195 245 345 445 545	150 200 250 300 400 500 600

外型及尺寸 Shape and dimension	型号 Code	N	E	D	SW	U	L
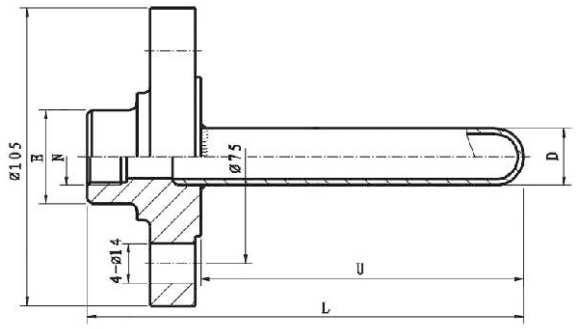	TH02A	M20×1.5 (NPT1/2)	-	Φ36	-	95 145 195 245 345 445 545	150 200 250 300 400 500 600
U(mm) / 介质流速(m/s) Flow velocity of medium (m/s) / 公称压力(P600)MPa Nominal pressure (P600) MPa ≤260 / 20 / ≤10	TH02B	M20×1.5 (NPT1/2)	-	Φ28			
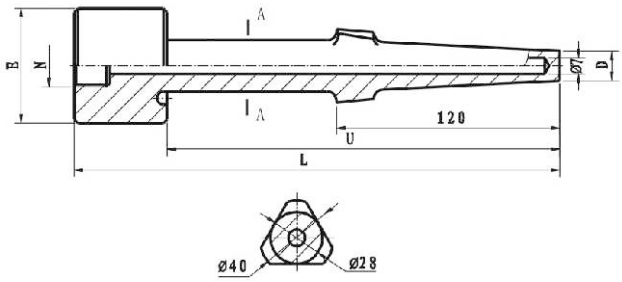	TH02C	M20×1.5 (NPT1/2)	Φ62	Φ33.5	-	300	250
U(mm) / 介质流速(m/s) Flow velocity of medium (m/s) / 公称压力(P600)MPa Nominal pressure (P600) MPa ≤250 / ≤80 / ≤38							
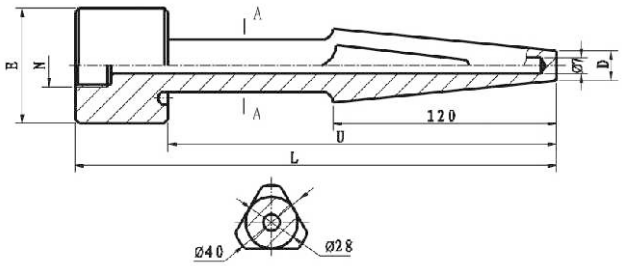	TH01T	M20×1.5 (NPT1/2)	Φ62	Φ16	32	300	250
U(mm) / 介质流速(m/s) Flow velocity of medium (m/s) / 公称压力(P600)MPa Nominal pressure (P600) MPa ≤250 / ≤100 / ≤38							

外型及尺寸 Shape and dimension	型号 Code	N	E	D	SW	U	L
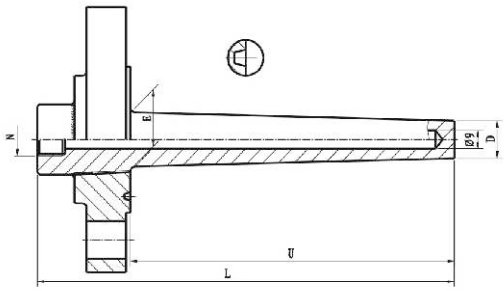 U(mm) / 介质流速(m/s) Flow velocity of medium (m/s) / 公称压力(P600)MPa Nominal pressure (P600) MPa ≤260 / ≤80 / ≤38	TH02G	M20×1.5 (NPT1/2)	Φ25	Φ21	-	150 200 250 300 350 400 450 500 550	230 280 330 380 430 480 530 580 630
	TH02H	M20×1.5 (NPT1/2)	Φ30	Φ25			
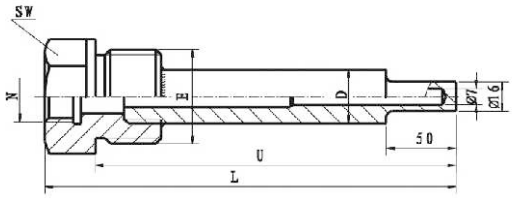 U(mm) / 介质流速(m/s) Flow velocity of medium (m/s) / 公称压力(P600)MPa Nominal pressure (P600) MPa ≤260 / ≤18 / ≤80 / ≤30 / ≤30	TH01V	M20×1.5 (NPT1/2)	M60×3	Φ28	66	230 430 630 1130	260 460 660 1160
	TH01W	M20×1.5 (NPT1/2)	NPT2	Φ28			
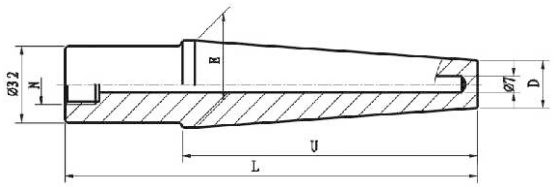 U(mm) / 介质流速(m/s) Flow velocity of medium (m/s) / 公称压力(P600)MPa Nominal pressure (P600) MPa ≤260 / ≤80 / ≤38	TH03J	M20×1.5 (NPT1/2)	Φ38	Φ21	-	50 100 150	150 200 250 300 350
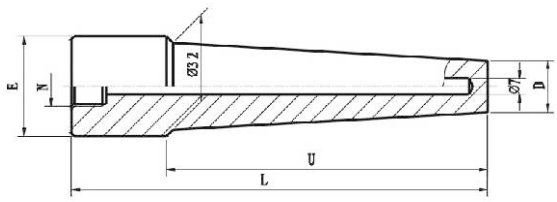 U(mm) / 介质流速(m/s) Flow velocity of medium (m/s) / 公称压力(P600)MPa Nominal pressure (P600) MPa ≤260 / ≤80 / ≤38	TH03K	M20×1.5 (NPT1/2)	Φ42	Φ18	-	50 100 150 200 250 300	100 150 200 250 300 350

保护管材质及选用 Material and selection of protective tube

材质 Material	使用温度 Temperature of use	特点及用途 Features and uses
1Cr18Ni9Ti	-200~800	具有高温耐蚀性，通常作为一般耐热钢使用 With corrosion resistance property in high temperature, it is usually used as a general heat-resistant steel
304	-200~800	低碳含量，具有良好耐晶间腐蚀性，通常作为一般耐热钢使用 Low carbon content, with good resistance to intergranular corrosion and it is usually used as a general heat-resistant steel
316	-200~750	低碳含量，具有良好耐晶间腐蚀性，作为耐腐蚀钢使用 Low carbon content, with good resistance to intergranular corrosion and it is usually used as a general heat-resistant steel
316L	-200~750	超低碳含量，具有良好耐晶间腐蚀性，作为耐腐蚀钢使用 Super-low carbon content, with good resistance to intergranular corrosion and it is usually used as a general heat-resistant steel
蒙乃尔Monel	-100~700	镍合金，具有良好耐晶间腐蚀性，适用于强硫酸等耐腐蚀性场合使用 Nickel alloy, with good resistance to intergranular corrosion and it is suitable for corrosion-resistance field where there are strong sulfuric acid and so on.
哈氏合金C-276 HastellyC-276	-100~700	具有优良耐晶间腐蚀性，作为耐腐蚀钢使用 With excellent intergranular corrosion resistance and it is used as corrosion-resistant steel
Inconel600	-100~1000	镍铬铁合金，具有优良高温抗氧化性，通常作为耐热钢使用 Alloy of nickel, chromium and iron with excellent oxidation-resistance property and it is usually used as heat-resistant steel
310S	-200~1000	具有高温抗氧化性，耐腐蚀型，通常作为耐热钢使用 With oxidation-resistance property in high temperature corrosion resistance and it is usually used as heat-resistant steel
GH3030	0~1100	镍基高温合金钢，具有优良抗氧化性，耐腐蚀型，通常作为耐热钢使用 Nickel-based alloy steel of high temperature with excellent oxidation-resistanceprop-erty and corrosion-resistance property and it is usually used as heat-resistant steel
GH3039	0~1300	镍基高温合金钢，具有优良抗氧化性，耐腐蚀型，通常作为耐热钢使用 Nickel-based alloy steel of high temperature with excellent oxidation-resistance prop-erty and corrosion-resistance property and it is usually used as heat-resistant steel
高铝质 High alumina	0~1300	工业陶瓷管，具有优良抗氧化性，耐腐蚀型 Industrial ceramic tube with excellent oxidation-resistance property and corrosion resistance.
刚玉质 Corundum	0~1600	工业陶瓷管，具有优良抗氧化性，耐腐蚀型 Industrial ceramic tube with excellent oxidation-resistance property and corrosion resistance.
3YC52	0~1300	高温合金，具有优良抗氧化性，耐腐蚀型，机械性能能，适用于高温场所 High-temperature alloy with excellent oxidation-resistance property and corrosion-re-sistance property, mechanical properties. It is suitable for places of high temperature
二硅化钼 Molybdenum disilicide	0~1600	具有优良抗氧化性，耐腐蚀型，机械性能好，适用于高温场所 With excellent oxidation-resistance property and corrosion-resistance property, mechanical properties. It is suitable for places of high temperature

选型须知

1）型号
2）套管代号
3）插入深度
4）套管材料

Notice for model selection

1) Model
2) Casing code
3) Insertion depth
4) Casing material

地址(ADD)：安徽省天长市仁和南路20号
NO.20 South Renhe Road,Tianchang City,Anhui Province
邮编(ZIP)：239300
电话(TEL)：86-0550-7777777 7038698 7308802
传真(FAX)：86-0550-7028077 7038699
网址(HTTP)：www.tiankang.com
邮箱(E-mail)：xsc@tiankang.com